PARTS CATALOGUE

KYMCO

SCOOTERS

KE10BA(PL)

LITY RS 50 2T(2011)

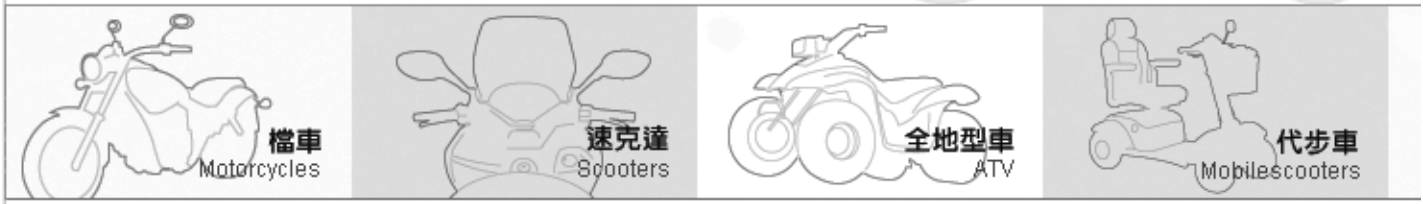

Release Date : 1899/12/31
Print Date : 2019/03/07

ABOUT THIS PARTS LIST

●This parts list is compiled all service parts for model KE10BA(PL).

●Any difference between color chart and motorcycle will be revised according to motorcycle.

●The Mark:

1.Marking "**" must add color code in the end before ordering parts.

2.Marking "#" are parts with modification, Please find the details from e-Parts system.

●When modification or additions to this parts list are made a revised edition at an appropriate time.

KYMCO

CONTENTS

● ABOUT THIS PARTS LIST 1

● COLOR CHART OF KE10BA(PL) 3

● CONTENTS-ENGINE GROUP 9

● CONTENTS-FRAME GROUP 11

● ENGINE PARTS LIST 14

● FRAME PARTS LIST 42

● PART NO. INDEX 92

KYMCO

NO	MODEL			COLOR CHART OF KE10BA(PL)			
	PHOTO NO			NO. 1	NO. 2	NO. 3	NO. 4
	BASIC COLOR			Orange	Light Blue Metallic	Dark Gray Metallic	Black
	CODE			Orange	Light Blue Metallic	Dark Gray Metallic	Black
	PARTS NAME	PARTS NO.	VERSION	MR068PA	PB281MA	NH230MA	NH001SA
1	COVERT FRONT	64301-LGB5-E10	1	41P	CAP	HKP	N1P
2	CAP FRONT COVER	64304-LGB5-E10	1				
3	COVER R BODY	83500-LGB5-E10	2				
4	COVER L BODY	83600-LGB5-E10	4				
5	LEVER R STRG HNDL	53175-LDC8-E10	1	M3A			
6	LEVER L STRG HNDL	53178-LGB6-E10	1				
7	COVERBATTERY	50326-LGB5-E10	0	N1R			
8	COVER UNDER	50613-LGB5-E10	1				
9	GRIP COMP THROT	53140-KNBN-C00	1				
10	GRIP L HANDLE	53166-KNBN-C00	1				
11	COVER HANDLE RR	53206-LGB5-E10	1				
12	GRILL FRONT	64303-LGB5-E10	0				
13	MOLD FRONT ASSY	6430A-LGB5-E10	0				
14	FLOOR PANEL	64310-LGB5-E10	1				
15	PLUG FLOOR	64316-LCB9-C10	5				
16	FENDER RR TIRE	80100-LHM9-E10	0				
17	FENDER RR INNER	80101-LGB5-E10	0				
18	FENDER REAR	80105-LGB5-E10	0				
19	COVER CENTER	80151-LGB5-E10	0				
20	LID LEG SHIELD	81132-LCB9-C10	1				
21	HOOK LUGGAGE	81132-LDC8-E10	1				
22	"BOX, LUGGAGE"	81250-LHM9-E10	0				
23	COVER R BOX	81255-LGB5-E10	1				
24	COVER L BOX	81256-LGB5-E10	1				
25	GRILL R SIDE	83510-LGB5-E10	1				
DATE OF STARTING-SALES							
DATE OF END-SALES							

KYMCO

NO	MODEL			COLOR CHART OF KE10BA(PL)			
	PHOTO NO			NO. 5	NO. 6	NO. 7	
	BASIC COLOR			Pearly White	Bright Red	Vivid Yellow	
	CODE			Pearly White	Bright Red	Vivid Yellow	
	PARTS NAME	PARTS NO.	VERSION	NH193PA	RR136PA	YR039SA	
1	COVERT FRONT	64301-LGB5-E10	1	NVP	R9P	Y3P	
2	CAP FRONT COVER	64304-LGB5-E10	1				
3	COVER R BODY	83500-LGB5-E10	2				
4	COVER L BODY	83600-LGB5-E10	4				
5	LEVER R STRG HNDL	53175-LDC8-E10	1	M3A			
6	LEVER L STRG HNDL	53178-LGB6-E10	1				
7	COVERBATTERY	50326-LGB5-E10	0	N1R			
8	COVER UNDER	50613-LGB5-E10	1				
9	GRIP COMP THROT	53140-KNBN-C00	1				
10	GRIP L HANDLE	53166-KNBN-C00	1				
11	COVER HANDLE RR	53206-LGB5-E10	1				
12	GRILL FRONT	64303-LGB5-E10	0				
13	MOLD FRONT ASSY	6430A-LGB5-E10	0				
14	FLOOR PANEL	64310-LGB5-E10	1				
15	PLUG FLOOR	64316-LCB9-C10	5				
16	FENDER RR TIRE	80100-LHM9-E10	0				
17	FENDER RR INNER	80101-LGB5-E10	0				
18	FENDER REAR	80105-LGB5-E10	0				
19	COVER CENTER	80151-LGB5-E10	0				
20	LID LEG SHIELD	81132-LCB9-C10	1				
21	HOOK LUGGAGE	81132-LDC8-E10	1				
22	"BOX, LUGGAGE"	81250-LHM9-E10	0				
23	COVER R BOX	81255-LGB5-E10	1				
24	COVER L BOX	81256-LGB5-E10	1				
25	GRILL R SIDE	83510-LGB5-E10	1				
DATE OF STARTING-SALES							
DATE OF END-SALES							

KYMCO

NO	MODEL			COLOR CHART OF KE10BA(PL)			
	PHOTO NO			NO. 1	NO. 2	NO. 3	NO. 4
	BASIC COLOR			Orange	Light Blue Metallic	Dark Gray Metallic	Black
	CODE			Orange	Light Blue Metallic	Dark Gray Metallic	Black
	PARTS NAME	PARTS NO.	VERSION	MR068PA	PB281MA	NH230MA	NH001SA
26	COVER L SIDE	83610-LGB5-E10	0	N1R			
27	COVER.L SIDE	11341-KKD6-C00	0	NEA			
28	WHEEL CAST RR	42601-LGB5-E10	1				
29	WHEEL COMP FR CAST	44601-LGB5-E10	1				
30	COVERT FR HANDLE	53205-LGB5-E10	1	NEP			
31	FENDER FR	61100-LGB5-E10	1				
32	MIRROR ASSY R BACK	88110-LEB5-C11	2				
33	MIRROR ASSY L BACK	88120-LEB5-C11	2				
34	"PROTECTOR COMP.,	18318-LGR4-E10	0	NES			
35	FORK ASSY FR R	51400-LGB5-E10	0	NGA			
36	FORK ASSY FR L	51500-LGB5-E10	0				
37	CARRIER REAR	81200-LGB5-E10	0				
38	CALIPER ASSY L FR	45200-LGB5-E10	0	NJA			
39	CUSHION ASSY REAR	52400-LHM9-E10	0	R8S			
40	SEAT ASSY	77200-LGB5-E10	0	T01			
41	EMB K-LOGO'28mm	86102-LEA5-E00	1				
42	STRIPE R BODY COVER	86221-LGB5-E10	0				
43	STRIPE L BODY COVER	86231-LGB5-E10	1				
44	STRIPE R FR MOLD	86282-LGB5-E10	0				
45	STRIPE L FR MOLD	86283-LGB5-E10	0				
46	STRIPE R LEG SHIELD	86732-LGB5-E10	0				
47	STRIPE L LEG SHIELD	86733-LGB5-E10	0				
48	STRIPE B R LEG SHIELD	86734-LGB5-E10	0				
49	STRIPE B L LEG SHIELD	86735-LGB5-E10	0				
50	CAUTION ANTI	87224-LHM9-EZ0	0				
DATE OF STARTING-SALES							
DATE OF END-SALES							

KYMCO

NO	MODEL			COLOR CHART OF KE10BA(PL)			
	PHOTO NO			NO. 5	NO. 6	NO. 7	
	BASIC COLOR			Pearly White	Bright Red	Vivid Yellow	
	CODE			Pearly White	Bright Red	Vivid Yellow	
	PARTS NAME	PARTS NO.	VERSION	NH193PA	RR136PA	YR039SA	
26	COVER L SIDE	83610-LGB5-E10	0	N1R			
27	COVER.L SIDE	11341-KKD6-C00	0	NEA			
28	WHEEL CAST RR	42601-LGB5-E10	1				
29	WHEEL COMP FR CAST	44601-LGB5-E10	1				
30	COVERT FR HANDLE	53205-LGB5-E10	1	NEP			
31	FENDER FR	61100-LGB5-E10	1				
32	MIRROR ASSY R BACK	88110-LEB5-C11	2				
33	MIRROR ASSY L BACK	88120-LEB5-C11	2				
34	"PROTECTOR COMP.,	18318-LGR4-E10	0	NES			
35	FORK ASSY FR R	51400-LGB5-E10	0	NGA			
36	FORK ASSY FR L	51500-LGB5-E10	0				
37	CARRIER REAR	81200-LGB5-E10	0				
38	CALIPER ASSY L FR	45200-LGB5-E10	0	NJA			
39	CUSHION ASSY REAR	52400-LHM9-E10	0	R8S			
40	SEAT ASSY	77200-LGB5-E10	0	T01			
41	EMB K-LOGO'28mm	86102-LEA5-E00	1				
42	STRIPE R BODY COVER	86221-LGB5-E10	0				
43	STRIPE L BODY COVER	86231-LGB5-E10	1				
44	STRIPE R FR MOLD	86282-LGB5-E10	0				
45	STRIPE L FR MOLD	86283-LGB5-E10	0				
46	STRIPE R LEG SHIELD	86732-LGB5-E10	0				
47	STRIPE L LEG SHIELD	86733-LGB5-E10	0				
48	STRIPE B R LEG SHIELD	86734-LGB5-E10	0				
49	STRIPE B L LEG SHIELD	86735-LGB5-E10	0				
50	CAUTION ANTI	87224-LHM9-EZ0	0				
DATE OF STARTING-SALES							
DATE OF END-SALES							

KYMCO

NO	MODEL			COLOR CHART OF KE10BA(PL)			
	PHOTO NO			NO. 1	NO. 2	NO. 3	NO. 4
	BASIC COLOR			Orange	Light Blue Metallic	Dark Gray Metallic	Black
	CODE			Orange	Light Blue Metallic	Dark Gray Metallic	Black
	PARTS NAME	PARTS NO.	VERSION	MR068PA	PB281MA	NH230MA	NH001SA
51	LABEL TIRE	87505-LDC8-E10	3	T01			
52	CAUTION SIDE STAND	87541-GAR1-C01	1				
53	MARK DRIVE CAUTION	87560-KNBN-E01	3				
54	MARK MAINT CAUTION	87542-GAR1-C01	2				
55	EMB BODY COVER	86202-LGB5-E10	1	T02	T01		
DATE OF STARTING-SALES							
DATE OF END-SALES							

KYMCO

NO	MODEL			COLOR CHART OF KE10BA(PL)			
	PHOTO NO			NO. 5	NO. 6	NO. 7	
	BASIC COLOR			Pearly White	Bright Red	Vivid Yellow	
	CODE			Pearly White	Bright Red	Vivid Yellow	
	PARTS NAME	PARTS NO.	VERSION	NH193PA	RR136PA	YR039SA	
51	LABEL TIRE	87505-LDC8-E10	3	T01			
52	CAUTION SIDE STAND	87541-GAR1-C01	1				
53	MARK DRIVE CAUTION	87560-KNBN-E01	3				
54	MARK MAINT CAUTION	87542-GAR1-C01	2	T01	T02	T01	
55	EMB BODY COVER	86202-LGB5-E10	1				
DATE OF STARTING-SALES							
DATE OF END-SALES							

KYMCO

CONTENTS - ENGINE GROUP

E01 COVER COMP FAN

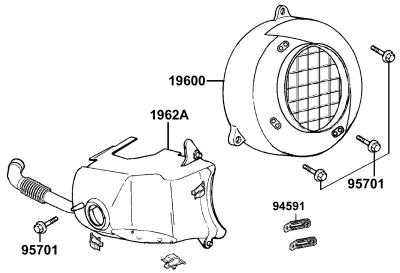

E02 CYLINDER

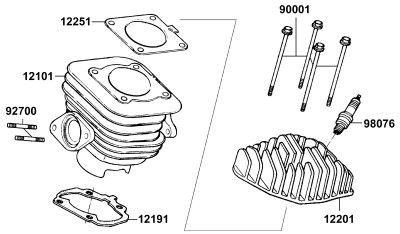

E03 Fan Cover Generator

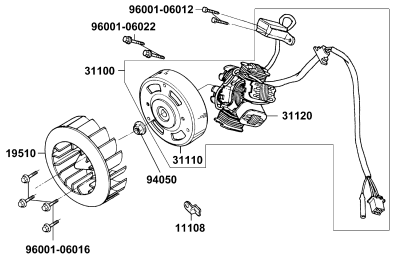

E04 MOTOR ASS'Y START

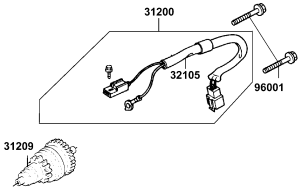

E05 Left Crankcase Cover

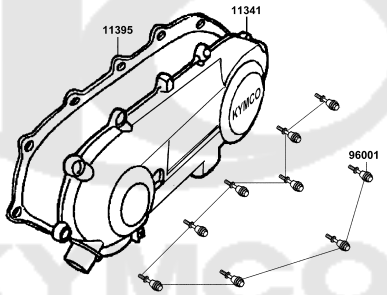

E06 Ratchet Kick Starer

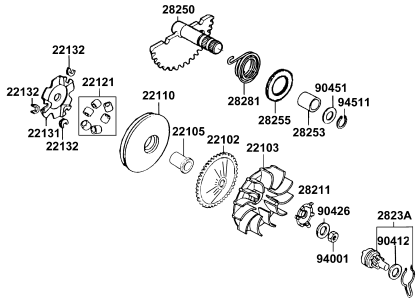

E07 Pulley Sub Assy

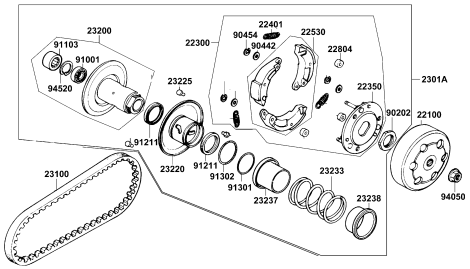

E08 Transmission

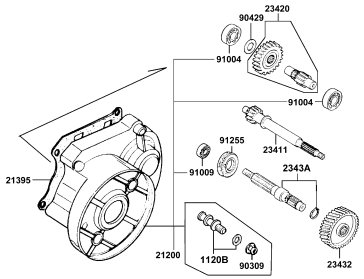

E09 Crankcase

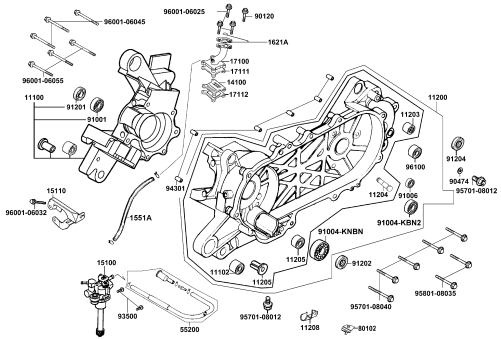

CONTENTS - ENGINE GROUP

E10 Crankshaft PistonRing Assy	**E11** Carburetor	
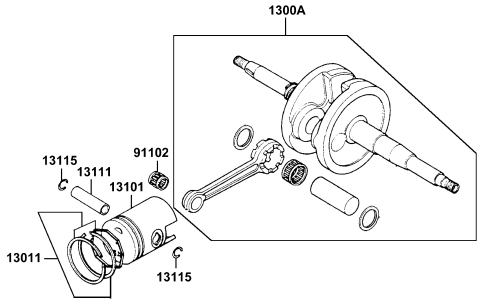	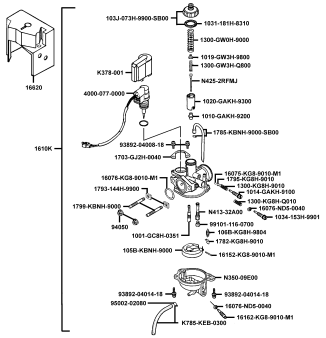	

CONTENTS - FRAME GROUP

F01 Head Light	**F02** Speedometer	**F03** Handle Steering Handle Cover
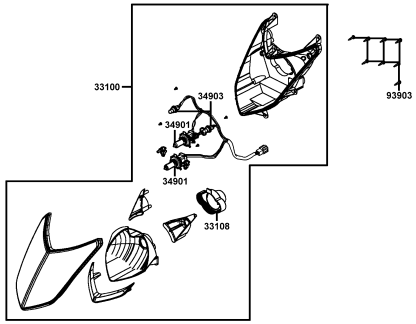	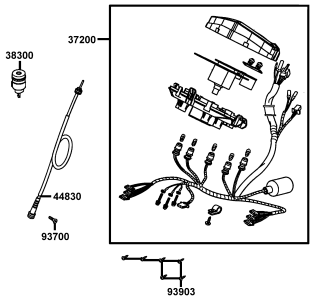	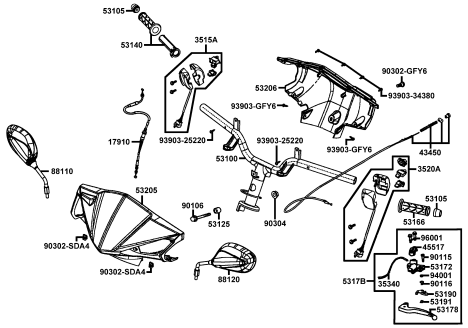
F04 Brake Master Cylinder	**F05** Front Cover	**F06** Stem Steering Front Cushion
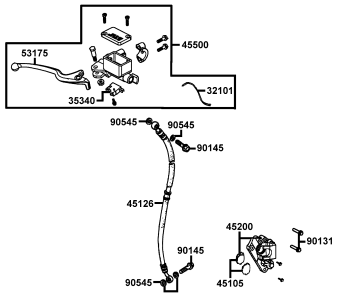	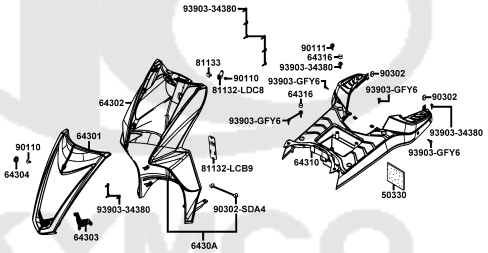	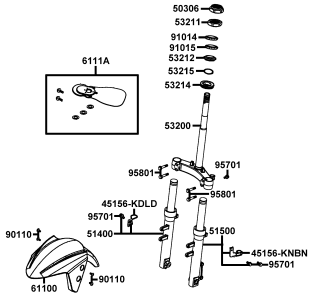
F07 Front Wheel	**F08** Rear Wheel	**F09** Seat
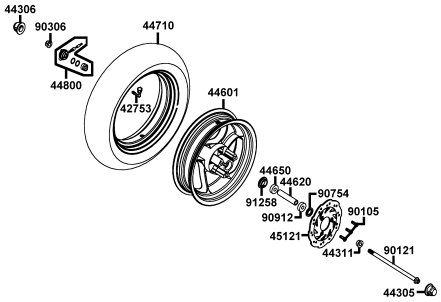	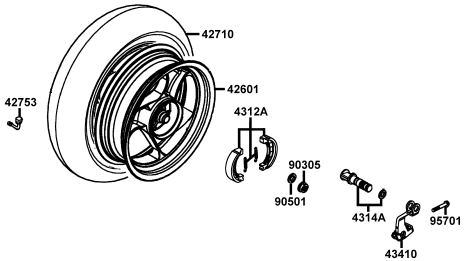	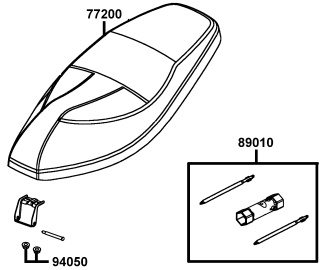

CONTENTS - FRAME GROUP

F10 Fuel Tank	**F11** Battery	**F12** Tank Oil
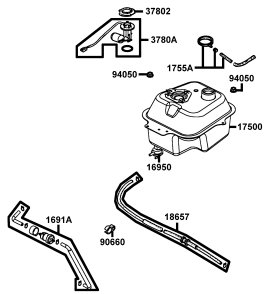	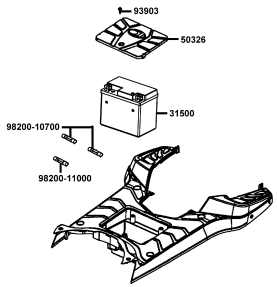	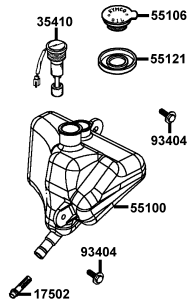
F13 Cover Body Cover Center	**F14** Air Cleaner	**F15** Exhaust Muffler
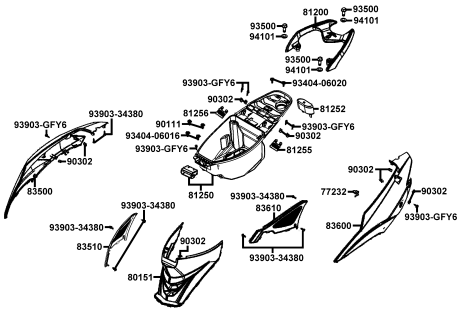	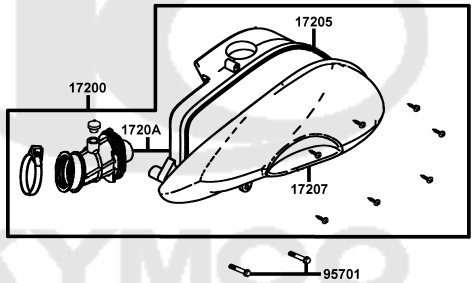	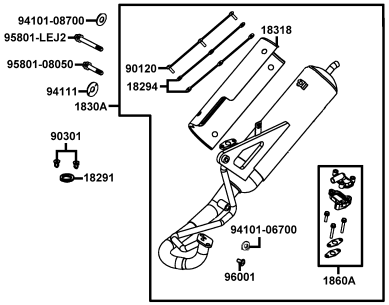
F16 Stand Kick Starter Arm	**F17** Rear Cushion	**F18** Front Winker
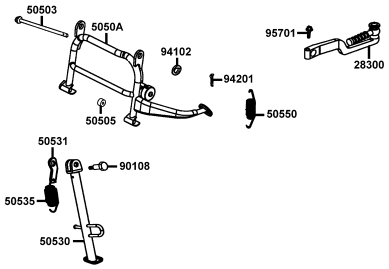	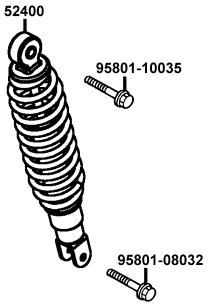	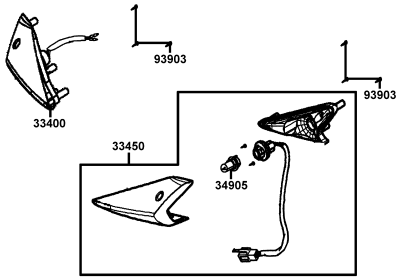

CONTENTS - FRAME GROUP

F19 Tail Light

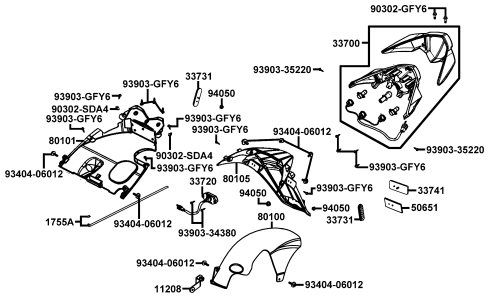

F20 Wire Harness

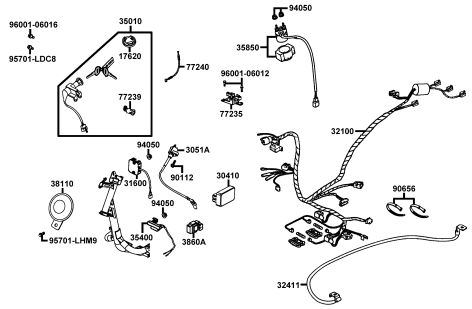

F21 Frame Body

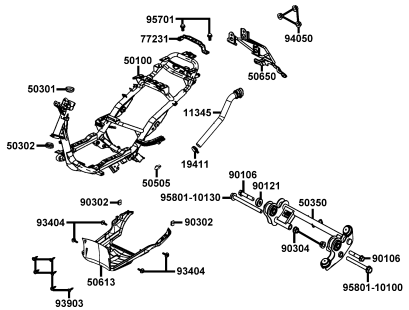

F22 Air Cleaner Two

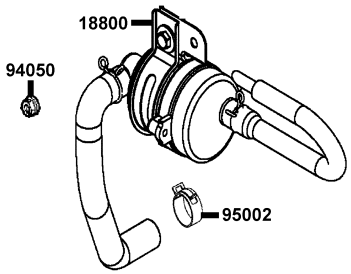

F23 Emblem Stripe

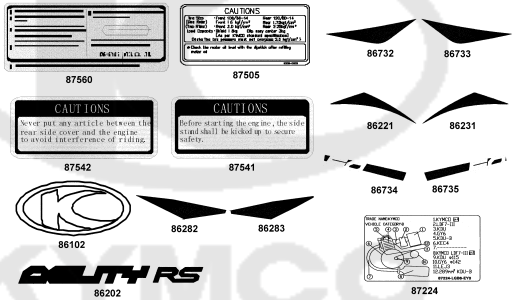

KYMCO

E01	COVER COMP FAN

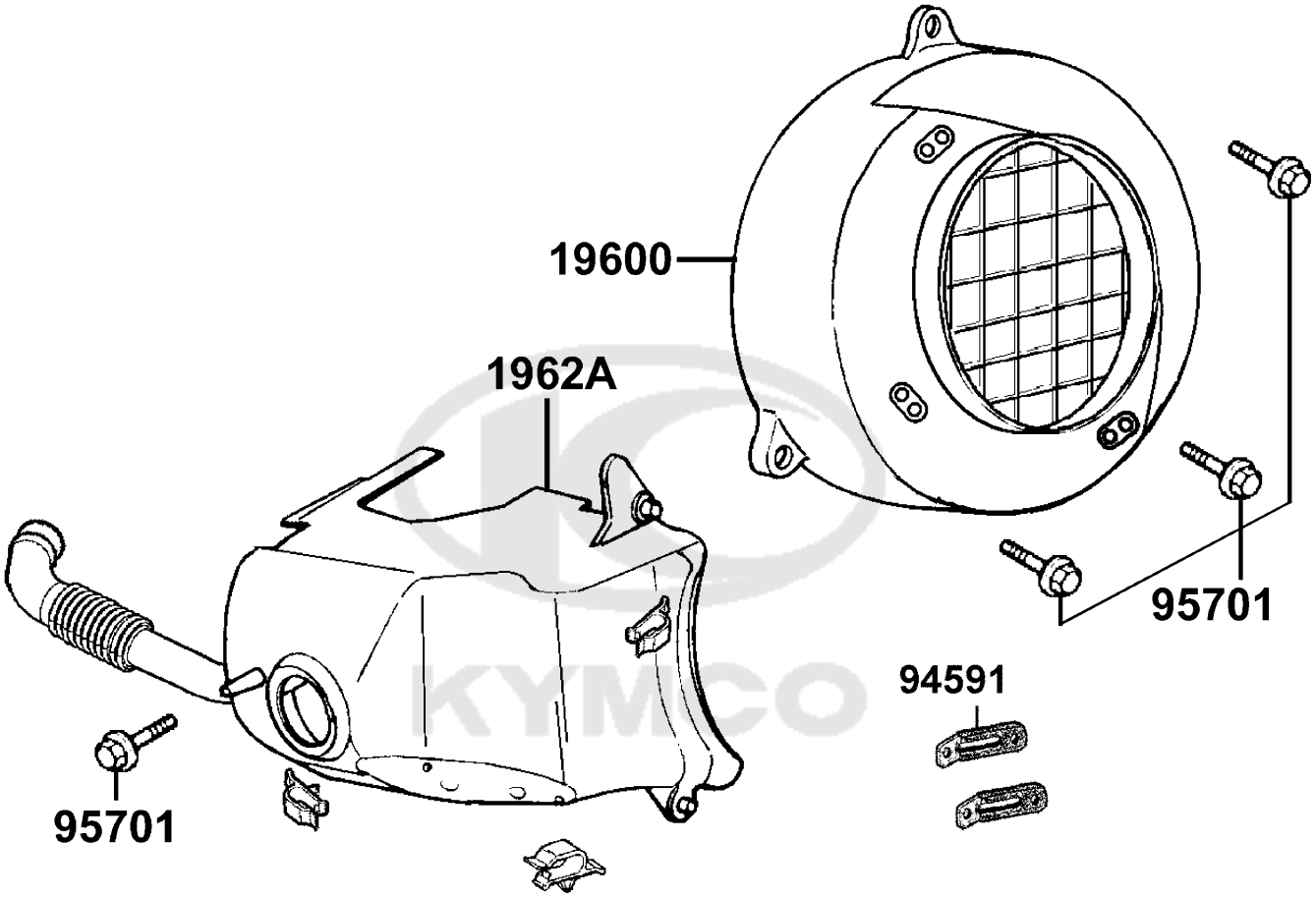

Sales mark	Ref no	Part no	Description	Reg description	Regd no
	19600	19600-KEB7-C00	COVER COMP FAN	COVER COMP FAN	1
	1962A	1962A-KEB7-C10	CLIP SET SHROUD	CLIP SET SHROUD	1
	94591	94591-KFBF-C00	CLIP 2*71	CLIP 2*71	1
	95701	95701-06025-08	BOLT FLANGE 6*25	BOLT FLANGE 6*25	4

KYMCO

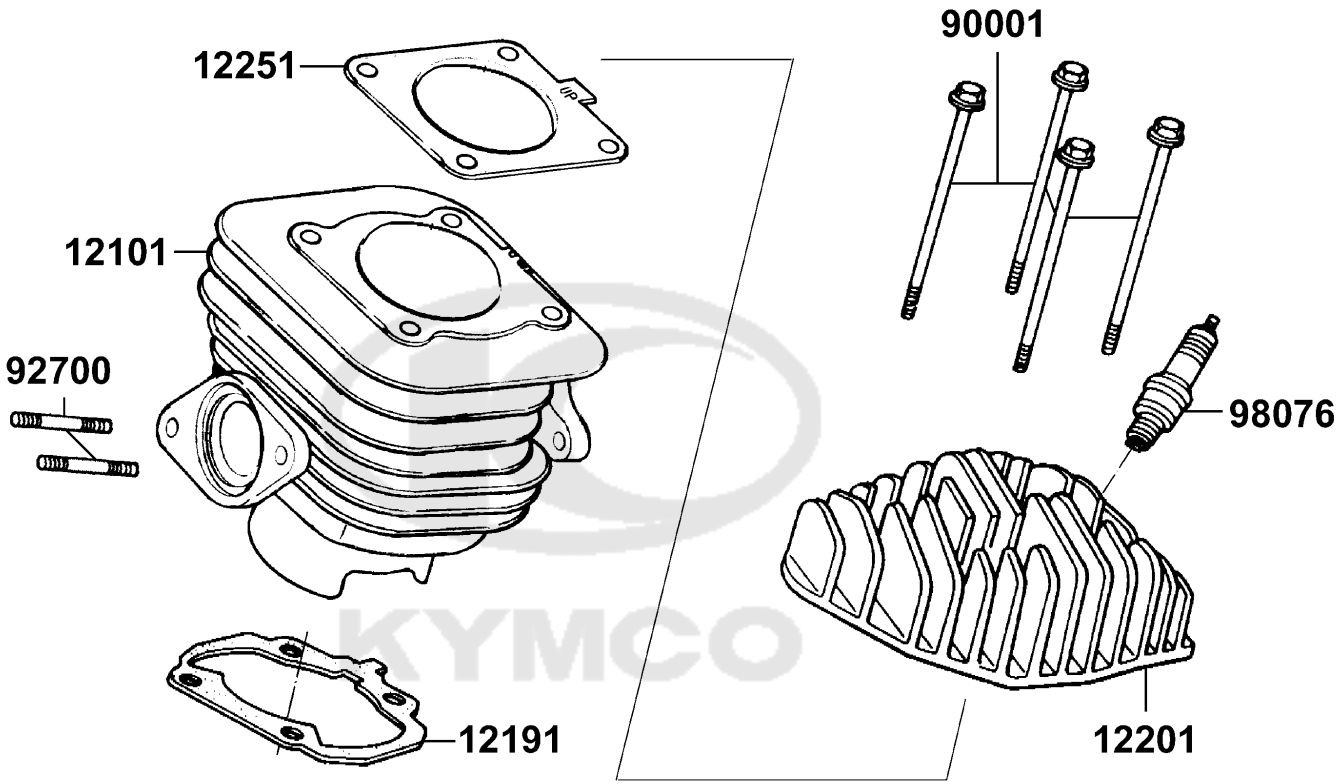
12251
90001
12101
92700
98076
12191
12201

Sales mark	Ref no	Part no	Description	Reg description	Regd no
	12101	12101-KEB7-C00	CYLINDER	CYLINDER	1
#	12191	12191-KEB7-E90	GASKET CYLINDER @A	GASKET CYLINDER @A	1
	12201	12201-KEB7-C00	HEAD CYLINDER	HEAD CYLINDER	1
	12251	12251-KEB7-C00	GASKET CYLINDER HEAD	GASKET CYLINDER HEAD	1
	90001	90001-GKAK-C00	BOLT FLANGE 7*100	BOLT FLANGE 7*100	1
	92700	92700-06028-1B	BOLT STUD 6*28	BOLT STUD 6*28	2
	98076	98076-5871G-00	SPARK PLUG (BR8HSA)	SPARK PLUG (BR8HSA)	1

KYMCO

Fan Cover Generator

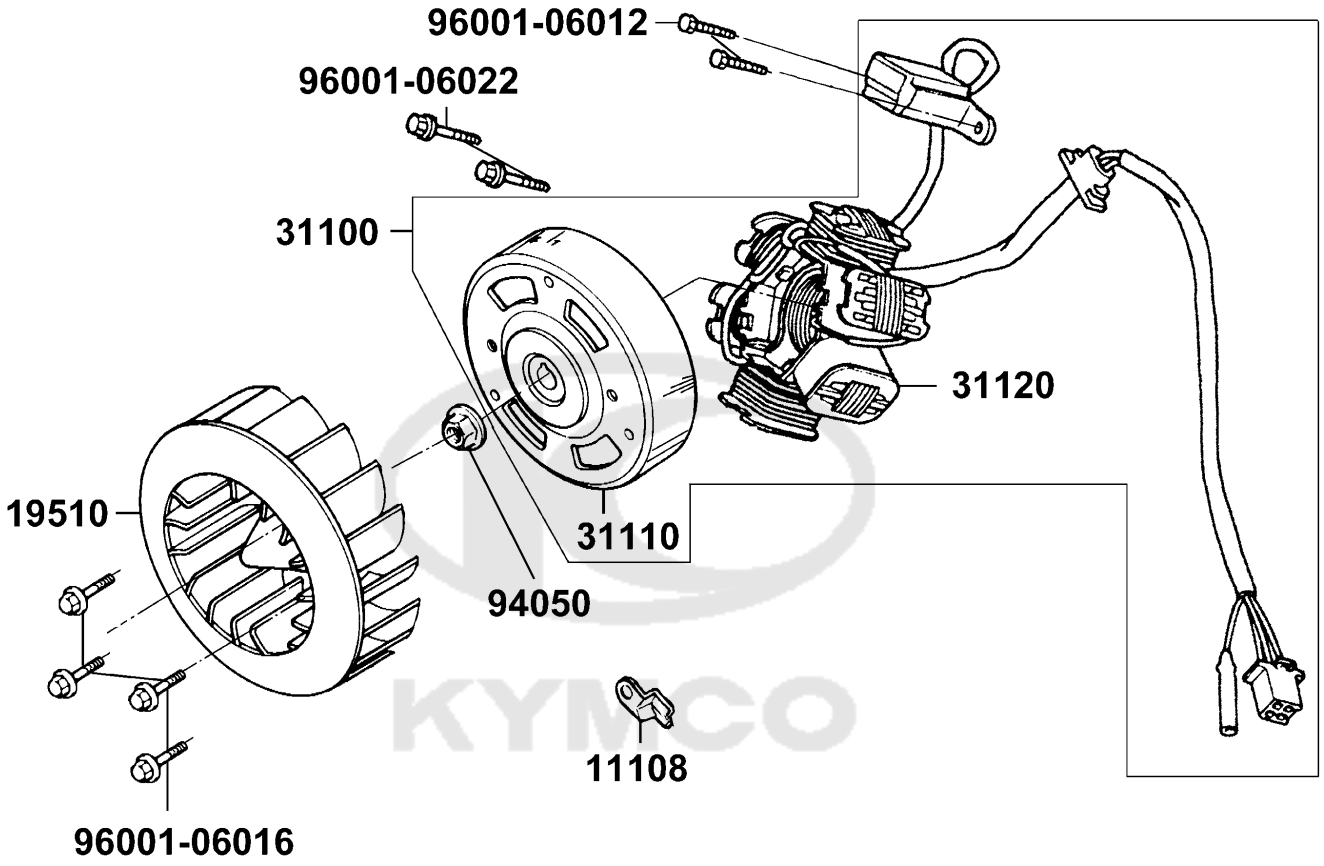

Sales mark	Ref no	Part no	Description	Reg description	Regd no
	11108	11108-KEB7-C00	HOLDER STATOR WIRE	HOLDER STATOR WIRE	1
	19510	19510-GBW2-C00	FAN COMP COOLING	FAN COMP COOLING	1
#	31100	31100-LHB3-M30	AC GEN ASSY	AC GEN ASSY	1
#	31110	31110-LHB3-M30	FLYWHEEL COMP	FLYWHEEL COMP	1
#	31120	31120-LHB3-M30	STATOR COMP	STATOR COMP	1
	94050	94050-10080	NUT FLANGE 10MM	NUT FLANGE 10MM	1
	96001-06012	96001-06012-08G	BOLT FLANGE SH 6x12 (C)	BOLT FLANGE SH 6*12 (Cr3+)	2
	96001-06016	96001-06016-08	BOLT FLANGE SH 6*16	BOLT FLANGE SH 6*16	4
	96001-06022	96001-06022-08	BOLT FLANGE SH 6*22	BOLT FLANGE SH 6*22	2

KYMCO

MOTOR ASS'Y START

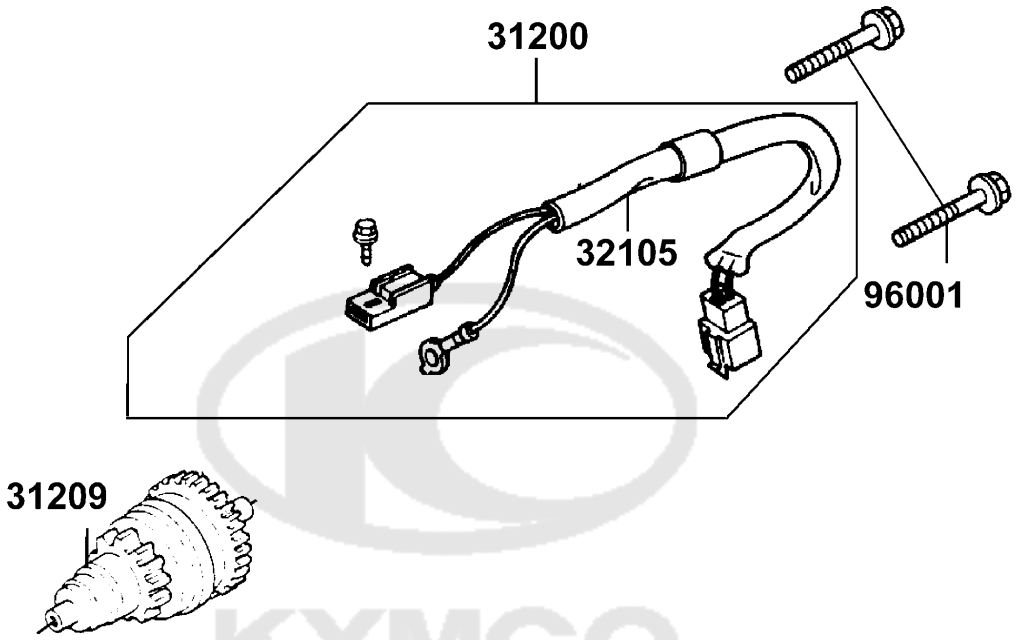

KYMCO

Sales mark	Ref no	Part no	Description	Reg description	Regd no
	31200	31200-LHM9-E10	MOTOR ASSY STARTER	MOTOR ASSY STARTER	1
	31209	31209-GKAK-C00	PINION ASSY STARTER	PINION ASSY STARTER	1
	32105	32105-LHB3-E10	SUB HARNESS	SUB HARNESS	1
	96001	96001-06025-08	BOLT FLANGE SH 6*25	BOLT FLANGE SH 6*25	2

KYMCO

E05	Left Crankcase Cover

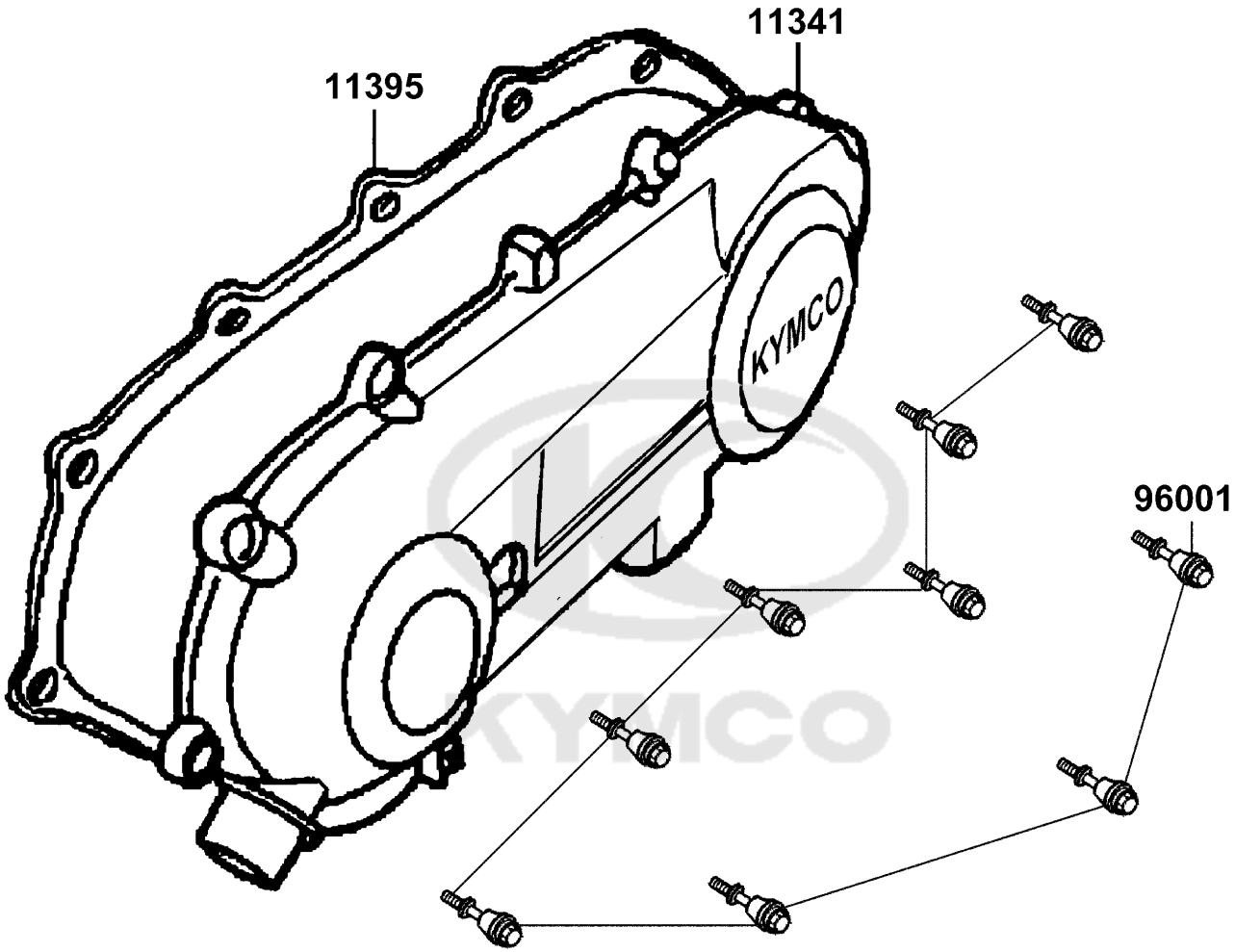

Sales mark	Ref no	Part no	Description	Reg description	Regd no
**	11341	11341-KKD6-C00	COVER L SIDE	COVER L SIDE	1
#	11395	11395-KKD6-E90	GASKET L COVER@A	GASKET L COVER@A	1
	96001	96001-06025-08	BOLT FLANGE SH 6*25	BOLT FLANGE SH 6*25	9

KYMCO

E06	Ratchet Kick Starer

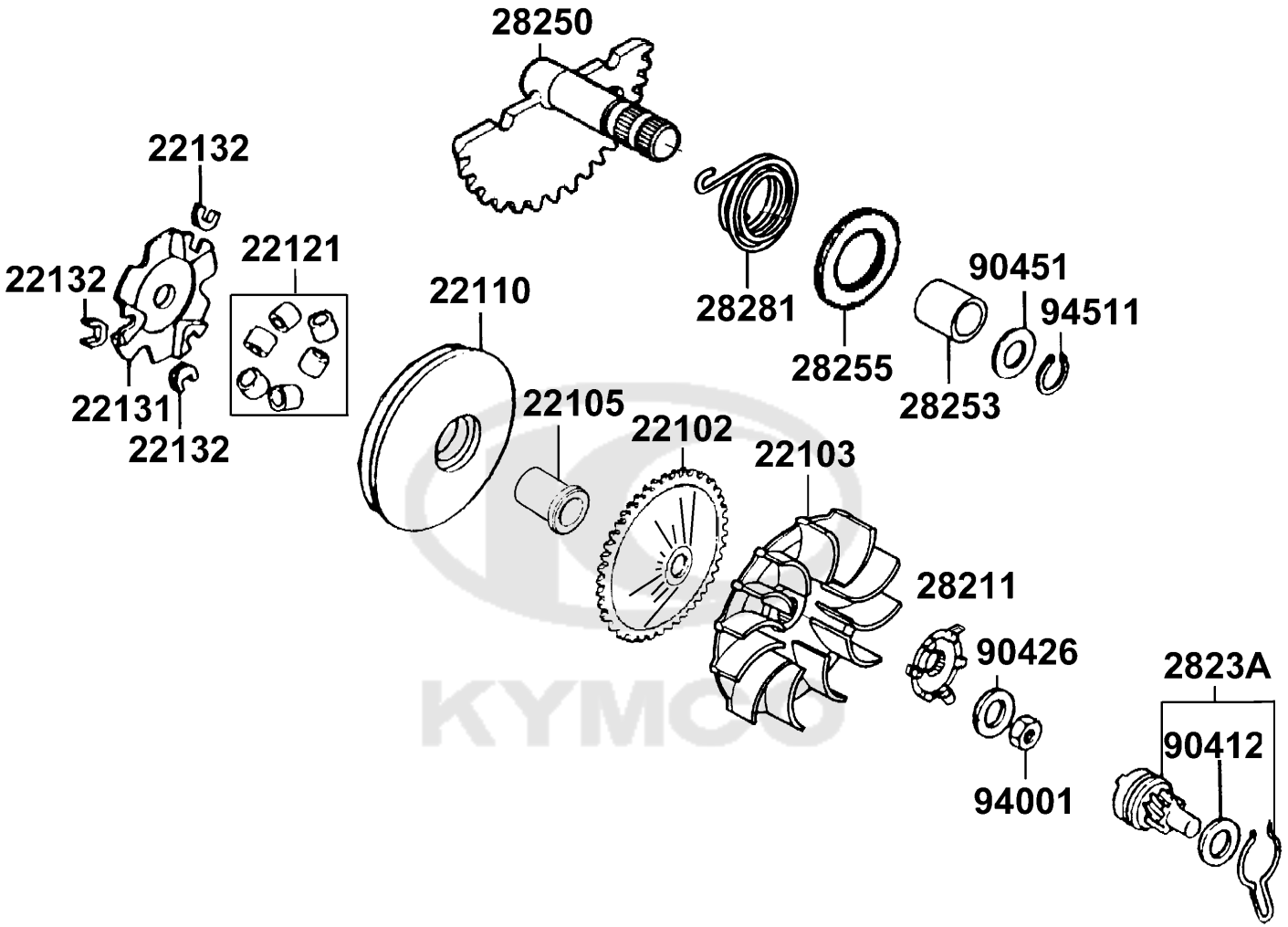

Sales mark	Ref no	Part no	Description	Reg description	Regd no
	22102	22102-LDC8-E10	FACE DRIVE	FACE DRIVE	1
	22103	22103-KEB7-C00	FAN CVT COOLING	FAN CVT COOLING	1
	22105	22105-KFA5-C00	BOSS DRIVE FACE	BOSS DRIVE FACE	1
	22110	22110-LDC8-E10	FACE COMP MOVABLE DRIVE	FACE COMP MOVABLE DRIVE	1
#	22121	22121-GLW0-315	ROLLER SET WEIGHT (1SET:6PCS)8.5g*6	ROLLER SET WEIGHT (1SET:6PCS)8.5g*6	1
	22131	22131-GHAH-C00	PLATE RAMP	PLATE RAMP	1
#	22132	22132-GLW0-315	PIECE SLIDE	PIECE SLIDE	1
	28211	28211-KEB7-W10	RATCHET KICK STARTER	RATCHET KICK STARTER	1
	2823A	2823A-GKAK-W10	GEAR ASSY KICK DRIVEN	GEAR ASSY KICK DRIVEN	1
	28250	28250-LDF7-E10	SPINDLE COMP KICK STARTER	SPINDLE COMP KICK STARTER	1
	28253	28253-GBN2-C00	BUSH KICK SPINDLE	BUSH KICK SPINDLE	1
	28255	28255-GFS6-C00	COLLAR KICK BOSS	COLLAR KICK BOSS	1
	28281	28281-GBN2-C00	SPRING KICK RETURN	SPRING KICK RETURN	1
	90412	90412-3K29-C00	WASHER THRUST 10M/M	WASHER THRUST 10M/M	1
	90426	90426-KNBN-C01	WASHER SPECIAL 12MM	WASHER SPECIAL 12MM	1
	90451	90451-GBN2-C00	WASHER KICK SPINDLE	WASHER KICK SPINDLE	1
	94001	94001-12280-0SG	NUT HEX 12MM(C)	NUT HEX 12MM(C)	1
	94511	94511-14000	CIR CLIP EX 14	CIR CLIP EX 14	1

KYMCO

E07 Pulley Sub Assy

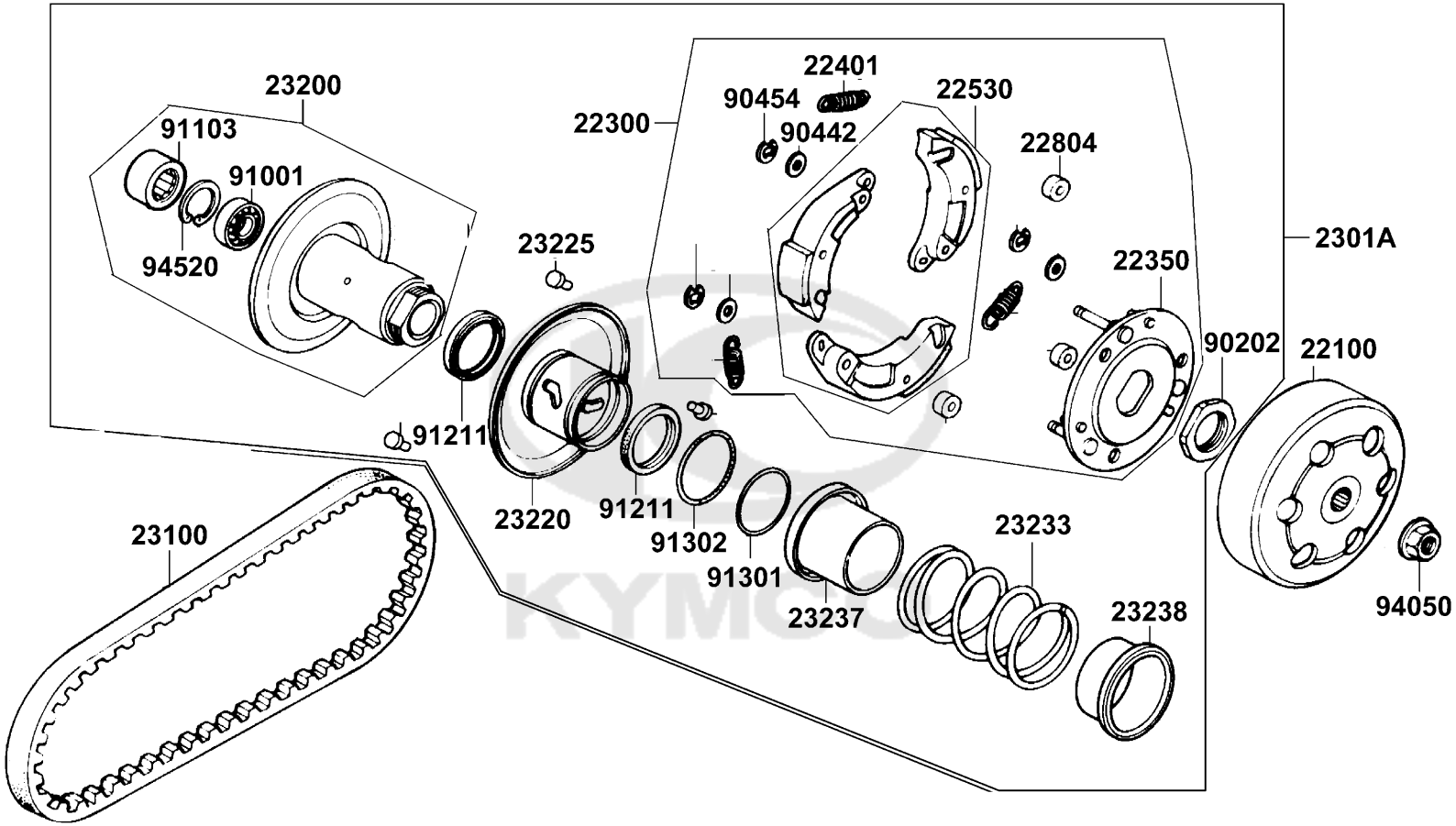

Sales mark	Ref no	Part no	Description	Reg description	Regd no
	22100	22100-LHM9-E10	CLUTCH OUTER	CLUTCH OUTER	1
	22300	22300-KXCX-900	PLATE ASSY DRIVE	PLATE ASSY DRIVE	1
	22350	22350-GKAK-C00	PLATE COMP DRIVE	PLATE COMP DRIVE	1
	22401	22401-GBG2-C00	SPRING CLUTCH	SPRING CLUTCH	1
	22530	22530-GKAK-C00	WEIGHT CLUTCH	WEIGHT CLUTCH	1
	22804	22804-1H48-C00	RUBBER CLUTCH DUMPER	RUBBER CLUTCH DUMPER	1
	2301A	2301A-KEB7-C00	PULLEY SUB ASSY	PULLEY SUB ASSY	1
	23100	23100-KEB7-C00	BELT DRIVE	BELT DRIVE	1
	23200	23200-GAR1-C00	FACE ASSY DRIVEN	FACE ASSY DRIVEN	1
	23220	23220-GKAK-C00	FACE COMP DRIVEN H1	FACE COMP DRIVEN H1	1
	23225	23225-GAR1-C00	PIN GUIDE	PIN GUIDE	1
	23233	23233-GHE8-001	SPG DRIVEN FACE	SPG DRIVEN FACE	1
	23237	23237-GAR1-C00	COLLAR SEAL	COLLAR SEAL	1
	23238	23238-GGS7-C00	COLLAR SPG	COLLAR SPG	1
	90202	90202-1G87-C00	NUT SPECIAL 28MM	NUT SPECIAL 28MM	1
	90442	90442-0D44-C00	WASHER THRUST 6M/M	WASHER THRUST 6M/M	1
	90454	90454-GBB2-C00	CIR CLIP 6MM	CIR CLIP 6MM	1
	91001	91001-GLW0-C00	BRG BALL RADIAL6204	BRG BALL RADIAL6204	1
	91103	91103-GAR1-C00	BRG NEEDLE 17*25*18 WS	BRG NEEDLE 17x25x18 WS	1
	91211	91211-GHK8-C00	OIL SEAL 34*39*3	OIL SEAL 34*39*3	1

KYMCO

E07 Pulley Sub Assy

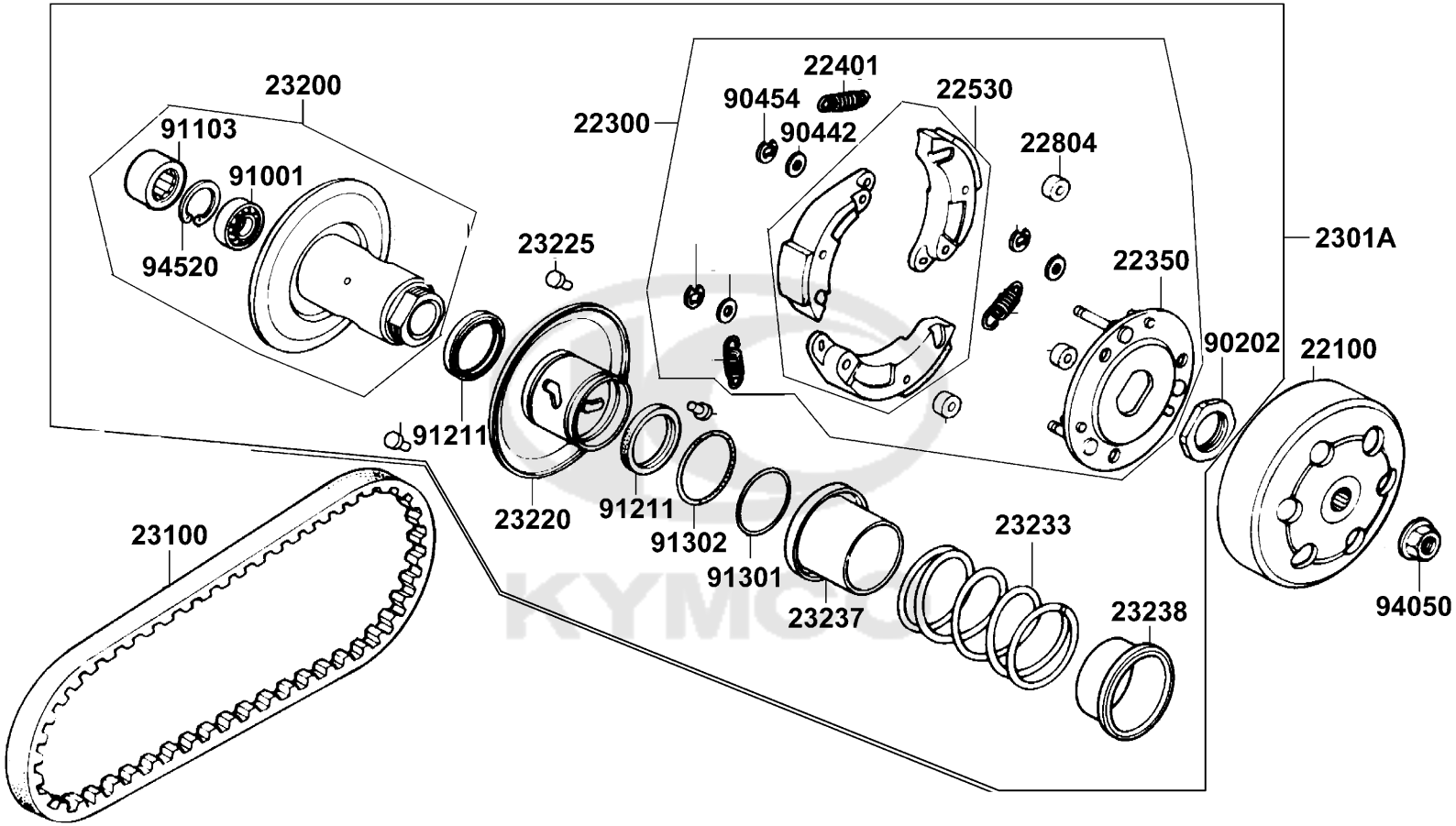

Sales mark	Ref no	Part no	Description	Reg description	Regd no
	91301	91301-KEA5-742	O-RING 36*1.5	O-RING 36X1.5	1
	91302	91302-PKA9-C00	O-RING 39.8*2.2	O-RING 39.8*2.2	1
	94050	94050-10080	NUT FLANGE 10MM	NUT FLANGE 10MM	1
	94520	94520-24000	CIR CLIP IN 24	CIR CLIP IN 24	1

KYMCO

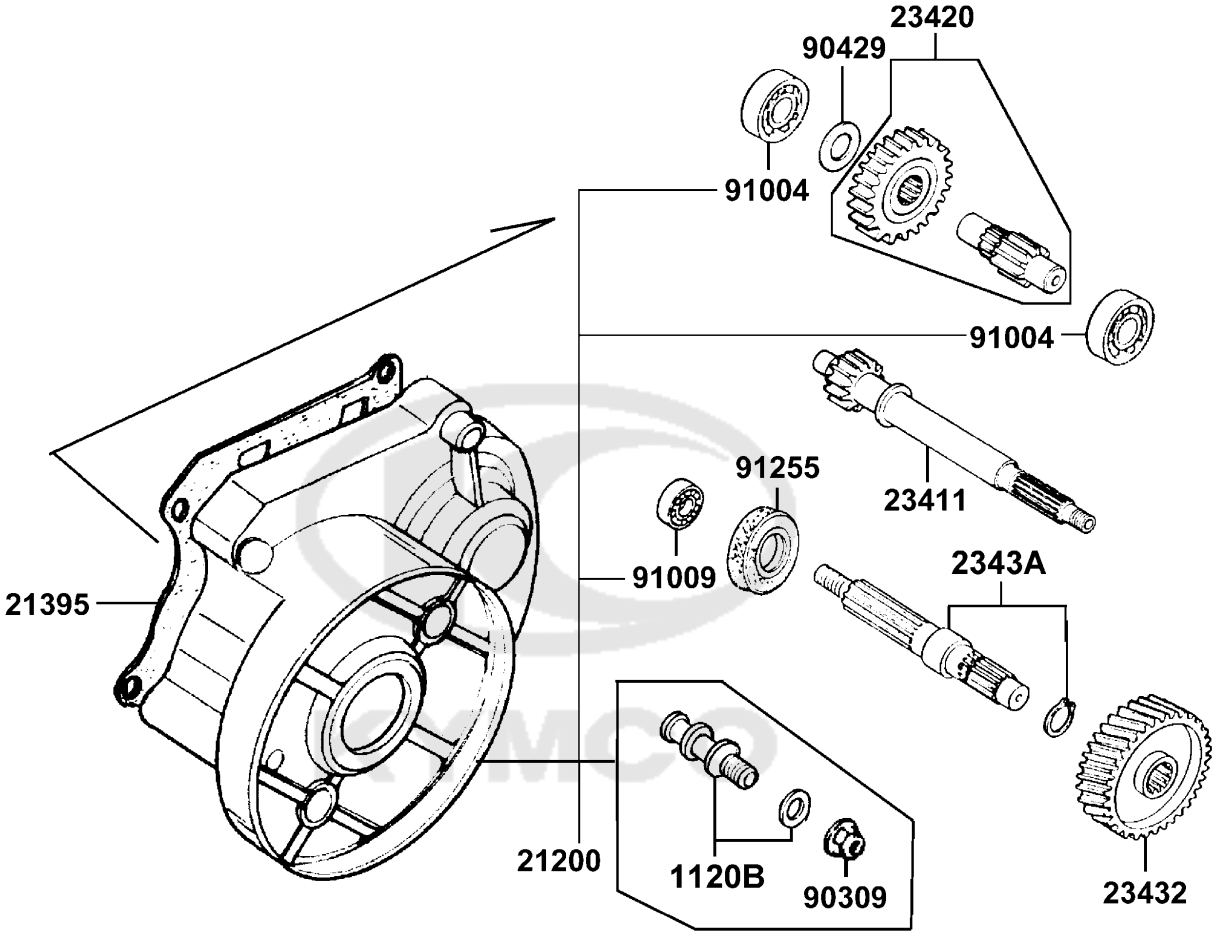
23420
90429
91004
91004
23411
91255
91009
2343A
21395
21200
1120B
90309
23432

Sales mark	Ref no	Part no	Description	Reg description	Regd no
	1120B	1120B-KGN7-C00	PIN ASSY ANCHOR	PIN ASSY ANCHOR	1
	21200	21200-KFA1-900	CASE COMP MISSION	CASE COMP MISSION	1
#	21395	21395-KNBN-E90	GASKET MISSION CASE	GASKET MISSION CASE	1
	23411	23411-KEB7-C00	SHAFT DRIVE	SHAFT DRIVE	1
	23420	23420-KEB7-C00	SHAFT COMP COUNTER	SHAFT COMP COUNTER	1
	23432	23432-KEB7-C00	GEAR FINAL	GEAR FINAL	1
	2343A	2343A-KNBN-C00	SHAFT FINAL	SHAFT FINAL	1
	90309	90309-KLF0-C00	NUT FLANGE 8MM	NUT FLANGE 8MM	1
	90429	90429-KNBN-C00	WASHER SIDE 12MM	WASHER SIDE 12MM	1
	91004	91004-KBN2-C00	BRG BALL RADIAL 6201	BRG BALL RADIAL 6201	1
	91009	91009-GLE0-C00	BRG BALL RADIAL 6004 UU	BRG BALL RADIAL 6004 UU	1
	91255	91255-LDC8-E10	OIL SEAL 27*42*7(C?)	OIL SEAL 27*42*7(C?)	1

KYMCO

E09 Crankcase

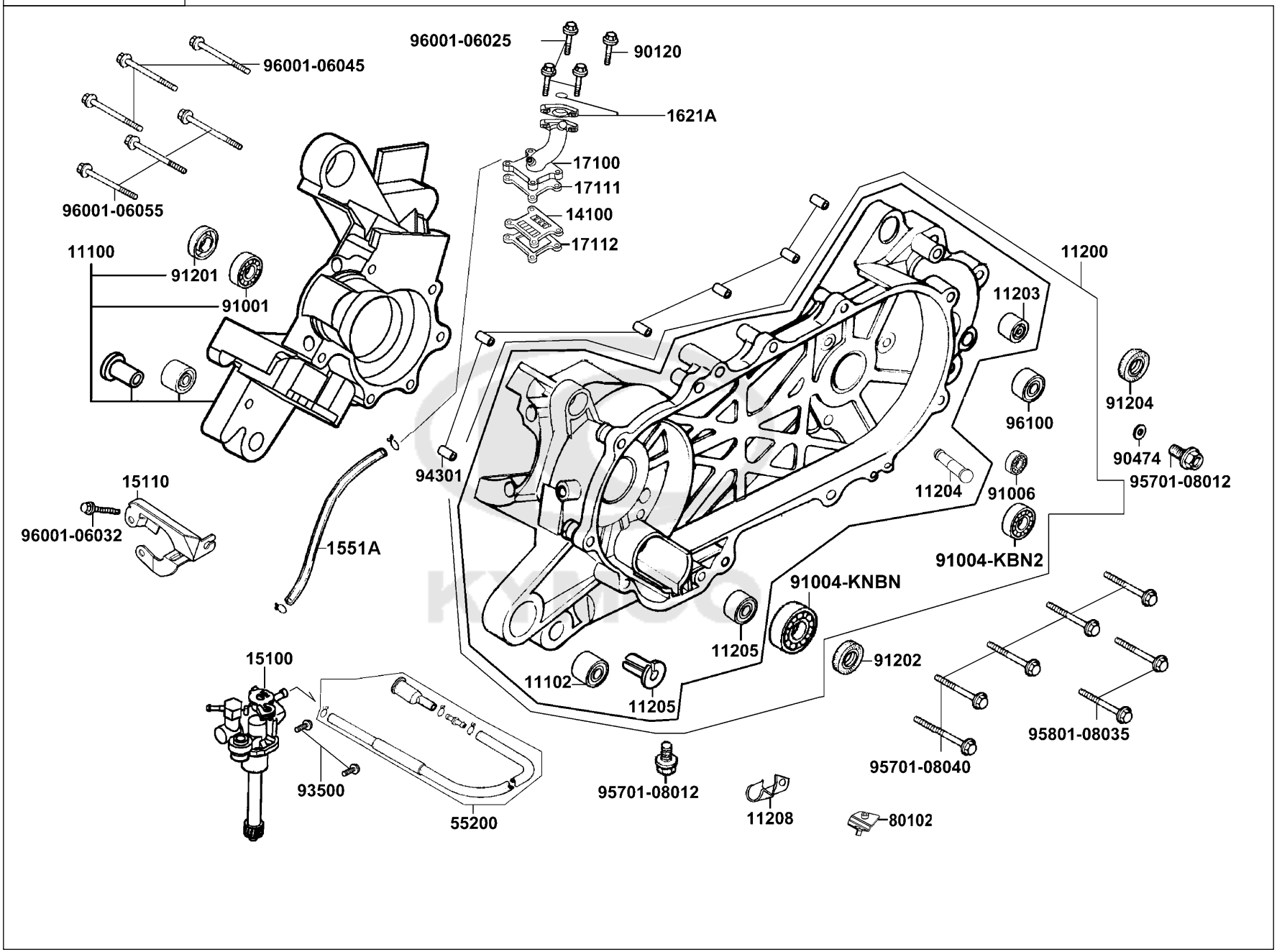

Sales mark	Ref no	Part no	Description	Reg description	Regd no
	11100	11100-KGB5-900	CRANK CASE COMP RIGHT	CRANK CASE COMP RIGHT	1
	11102	11102-1G87-C00	RUB BUSH ENG HANGER	RUB BUSH ENG HANGER	1
#	11200	11200-KEB7-325	CRANK CASE SET LEFT	CRANK CASE SET LEFT	1
	11203	11203-GGC7-W10	UNDER RUBBER BUSH REAR CUSHION	UNDER RUBBER BUSH REAR CUSHION	1
	11204	11204-LEJ2-E10	PIN SPG HOOK	PIN SPG HOOK	1
	11205-GHAH	11205-GHAH-C00	BUSH 8*12*8	BUSH 8*12*8	1
	11205-KED5	11205-KED5-C00	BUSH M STAND	BUSH M STAND	1
	11208	11208-GKAK-C00	CLAMPER CARB DRAIN	CLAMPER CARB DRAIN	1
	14100	14100-KEB7-C00	VALVE COMP REED	VALVE COMP REED	1
	15100	15100-KEB7-E00	PUMP ASSY OIL	PUMP ASSY OIL	1
	15110	15110-KEB7-C00	PLATE OIL PUMP SET	PLATE OIL PUMP SET	1
	1551A	1551A-LCD1-E00	TUBE ASSY OIL PUMP ASSY	TUBE ASSY OIL PUMP ASSY	1
	1621A	1621A-GKAK-901	INSULATOR CARB ASSY	INSULATOR CARB ASSY	1
	17100	17100-KEB7-901	PIPE COMP INLET	PIPE COMP INLET	1
#	17111	17111-LHM9-E90	GASKET INLET PIPE A	GASKET INLET PIPE A @A	1
#	17112	17112-KEB7-E90	GASKET INLET PIPE B	GASKET INLET PIPE B @A	1
	55200	55200-LGR4-E10	TUBE ASSY OIL	TUBE ASSY OIL	1
	80102	80102-LHM9-E10	STAY A RR TIRE FENDER	STAY A RR TIRE FENDER	1
	90120	90120-GAR1-C00	SOCKET BOLT SPECIAL 6*28	SOCKET BOLT SPECIAL 6*28	1
	90474	90474-3C33-C00	WASHER 8MM (T*2)	WASHER 8MM (T*2)	1

KYMCO

E09 Crankcase

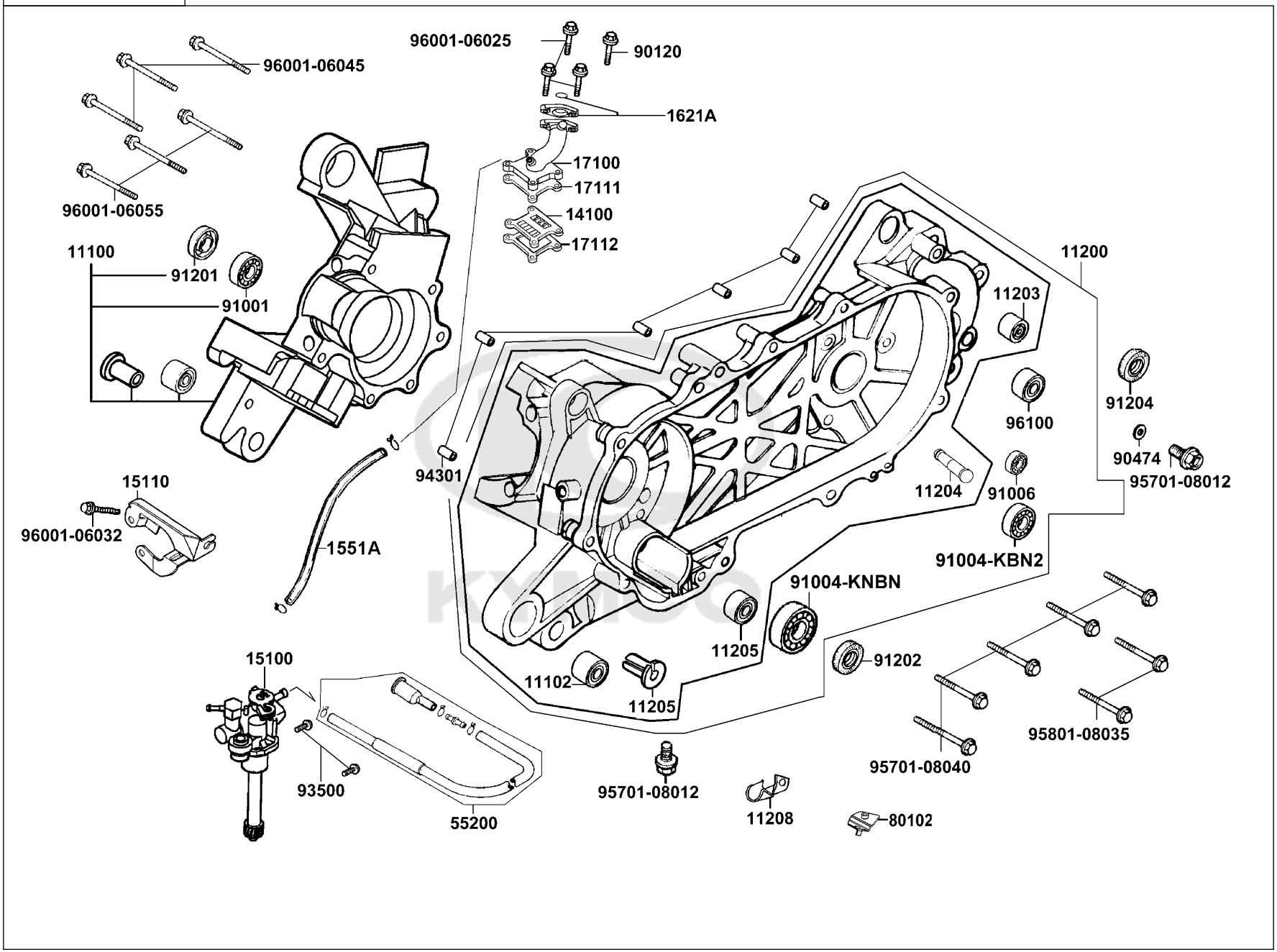

Sales mark	Ref no	Part no	Description	Reg description	Regd no
	91001	91001-GLW0-C00	BRG BALL RADIAL6204	BRG BALL RADIAL6204	1
	91004-KBN2	91004-KBN2-C00	BRG BALL RADIAL 6201	BRG BALL RADIAL 6201	1
	91004-KNBN	91004-KNBN-C00	BRG BALL RADIAL 6203 SPC	BRG BALL RADIAL 6203 SPC	1
	91006	91006-KNBN-C00	BRG BALL RADIAL25*56*12	BRG BALL RADIAL25*56*12	1
	91201	91201-KNBN-C00	OIL SEAL 15.6*25.5*7	OIL SEAL 15.6*25.5*7	1
	91202	91202-KNBN-92A	OIL SEAL 20*31*7	OIL SEAL 20*31*7	1
	91204	91204-KNBN-C00	OIL SEAL 17*30*6	OIL SEAL 17*30*6	1
	93500	93500-05012-0H	SCREW PAN 5*12	SCREW PAN 5*12	2
	94301	94301-10200	DOWEL PIN 10*20	DOWEL PIN 10*20	6
	95701-08012	95701-08012-08G	BOLT FLANGE 8X12(C)	BOLT FLANGE 8*12 (C)	2
	95701-08040	95701-08040-08	BOLT FLANGE 8*40	BOLT FLANGE 8*40	5
	95801	95801-08035-08	BOLT FLANGE 8*35	BOLT FLANGE 8*35	2
	96001-06025	96001-06025-08	BOLT FLANGE SH 6*25	BOLT FLANGE SH 6*25	3
	96001-06032	96001-06032-08	BOLT FLANGE SH 6*32	BOLT FLANGE SH 6*32	1
	96001-06045	96001-06045-08	BOLT FLANGE SH 6*45	BOLT FLANGE SH 6*45	3
	96001-06055	96001-06055-08	BOLT FLANGE SH 6*55 (C)	BOLT FLANGE SH 6*55	3
	96100	96100-62033-00	BEARING BALL RADIAL 6203	BEARING BALL RADIAL 6203	1

KYMCO

E10	Crankshaft PistonRing Assy Piston

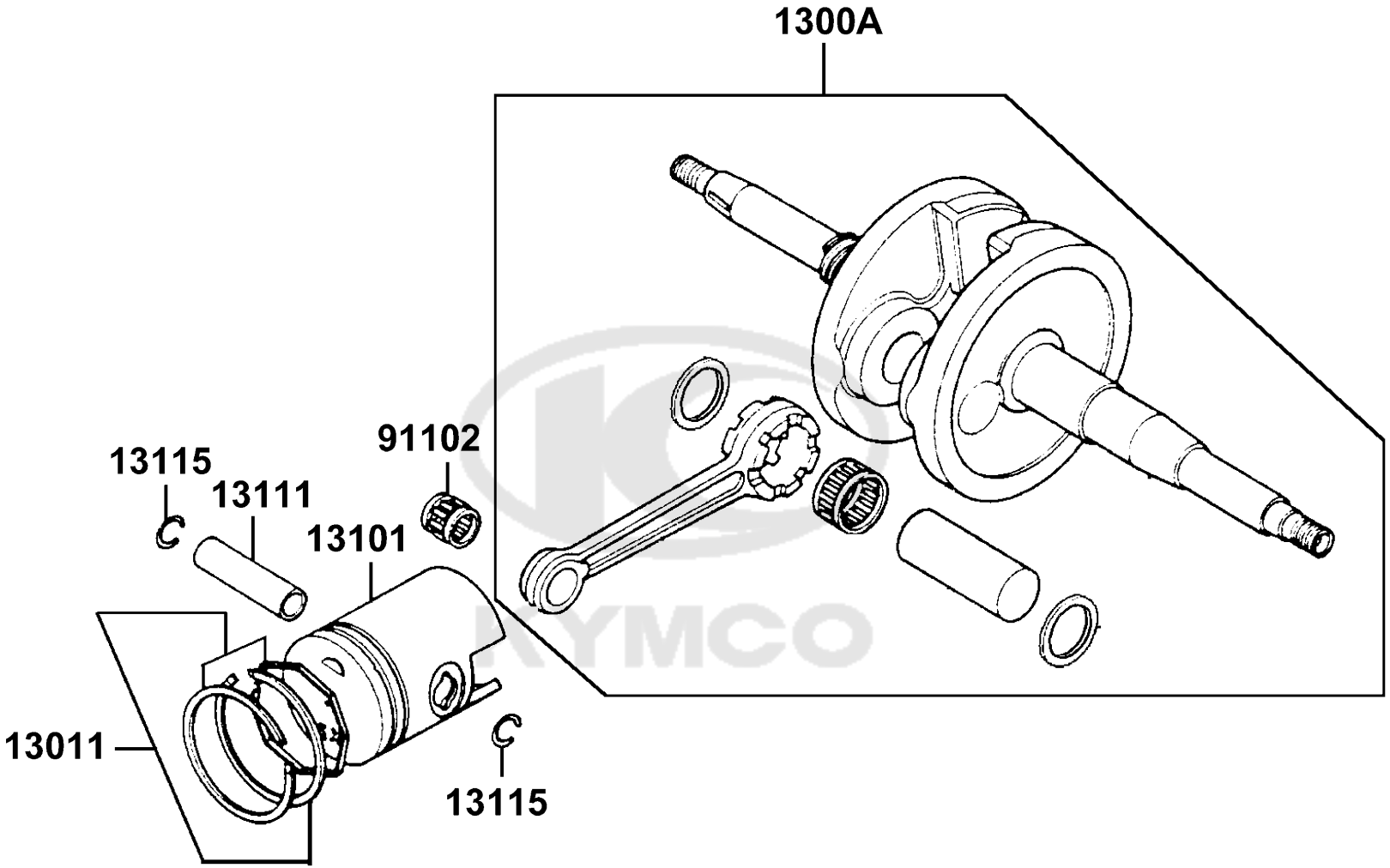

Sales mark	Ref no	Part no	Description	Reg description	Regd no
	1300A	1300A-GKAK-C00	CRANK SHAFT ASSY	CRANK SHAFT ASSY	1
	13011	13011-GLW0-C00	RING ASSY PISTON	RING ASSY PISTON	1
	13101	13101-GLW0-901	PISTON	PISTON	1
	13111	13111-1F66-001	PIN PISTON	PIN PISTON	1
	13115	13115-1F56-C00	CLIP PISTON PIN 12MM	CLIP PISTON PIN 12MM	1
	91102	91102-GLW0-C00	BRG CON-ROD S.E	BRG CON-ROD S.E	1

KYMCO

Carburetor

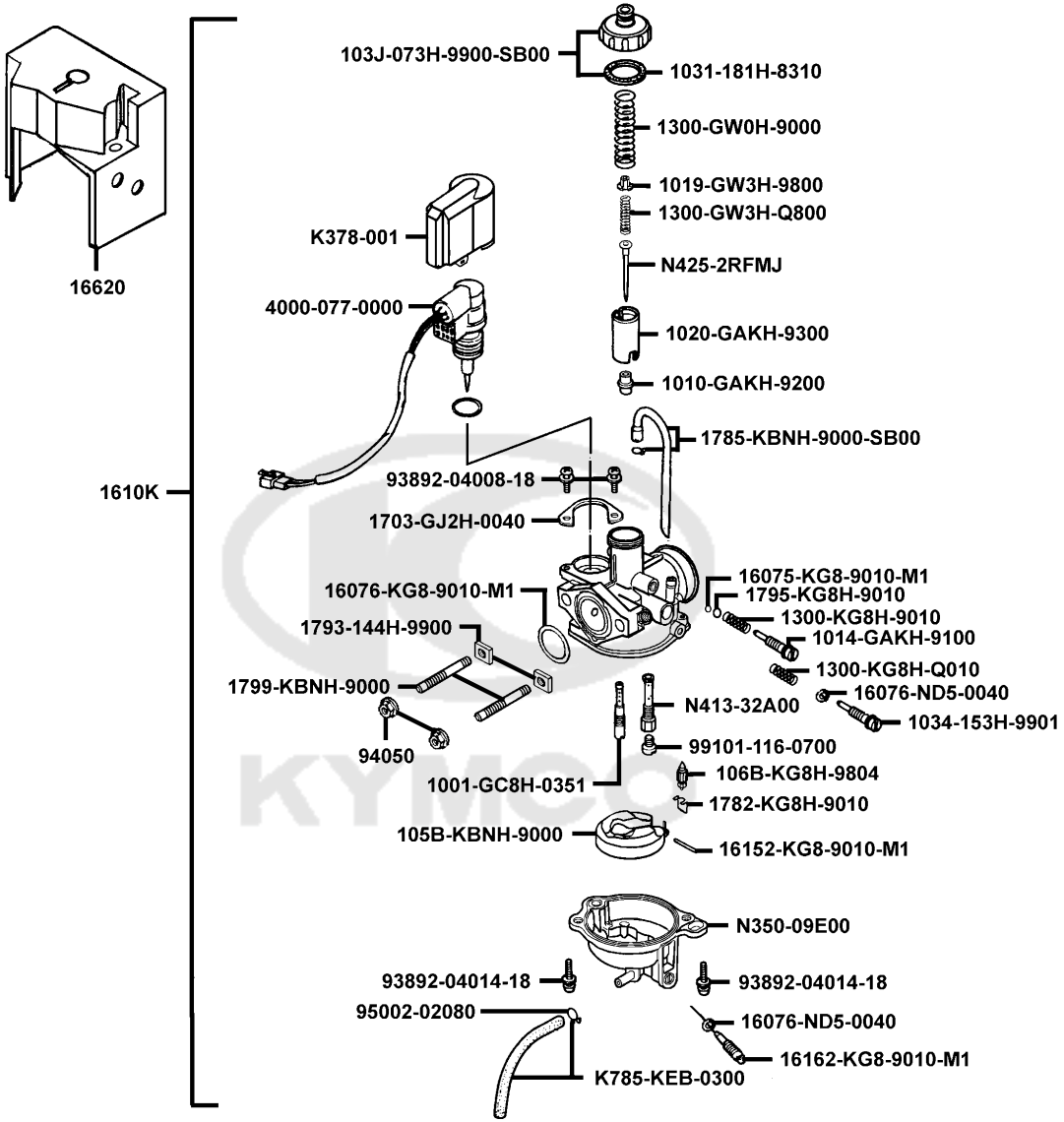
16620
1610K
103J-073H-9900-SB00
1031-181H-8310
1300-GW0H-9000
1019-GW3H-9800
1300-GW3H-Q800
K378-001
N425-2RFMJ
4000-077-0000
1020-GAKH-9300
1010-GAKH-9200
1785-KBNH-9000-SB00
93892-04008-18
1703-GJ2H-0040
16076-KG8-9010-M1
16075-KG8-9010-M1
1795-KG8H-9010
1300-KG8H-9010
1793-144H-9900
1014-GAKH-9100
1300-KG8H-Q010
1799-KBNH-9000
16076-ND5-0040
N413-32A00
1034-153H-9901
94050
99101-116-0700
106B-KG8H-9804
1001-GC8H-0351
1782-KG8H-9010
105B-KBNH-9000
16152-KG8-9010-M1
N350-09E00
93892-04014-18
93892-04014-18
95002-02080
16076-ND5-0040
16162-KG8-9010-M1
K785-KEB-0300

Sales mark	Ref no	Part no	Description	Reg description	Regd no
	1001	1001-GC8H-0351	SLOW JET	SLOW JET	1
	1010	1010-GAKH-9200	NEEDLE JET	NEEDLE JET	1
	1014	1014-GAKH-9100	ADJUST SCREW	ADJUST SCREW	1
	1019	1019-GW3H-9800	VALVE PLATE	VALVE PLATE	1
	1020	1020-GAKH-9300	THROTTLE VALVE	THROTTLE VALVE	1
	1031	1031-181H-8310	TOP GASKET	TOP GASKET	1
	1034	1034-153H-9901	STOP SCREW	STOP SCREW	1
	103J	103J-073H-9900-SB00	TOP SET	TOP SET	1
	105B	105B-KBNH-9000	FLOAT COMP	FLOAT COMP	1
	106B	106B-KG8H-9804	FLOAT VALVE COMP	FLOAT VALVE COMP	1
	1300-GW0H	1300-GW0H-9000	SPG COMPR	SPG COMPR	1
	1300-GW3H	1300-GW3H-Q800	SPG COMPR	SPG COMPR	1
	1300-KG8H-9010	1300-KG8H-9010	COMPR SPG	COMPR SPG	1
	1300-KG8H-Q010	1300-KG8H-Q010	COMPR SPG	COMPR SPG	1
	16075	16075-KG8-9010-M1	O-RING	O-RING	1
	16076-KG8	16076-KG8-9010-M1	O-RING	O-RING	1
	16076-ND5	16076-ND5-0040	O RING	O RING	2
	1610K	1610K-KFA6-E05	CARBURETOR ASSY	CARBURETOR ASSY	1
	16152	16152-KG8-9010-M1	ARM PIN	ARM PIN	1
	16162	16162-KG8-9010-M1	DRAIN SCREW PAN	DRAIN SCREW PAN	1

KYMCO

Carburetor

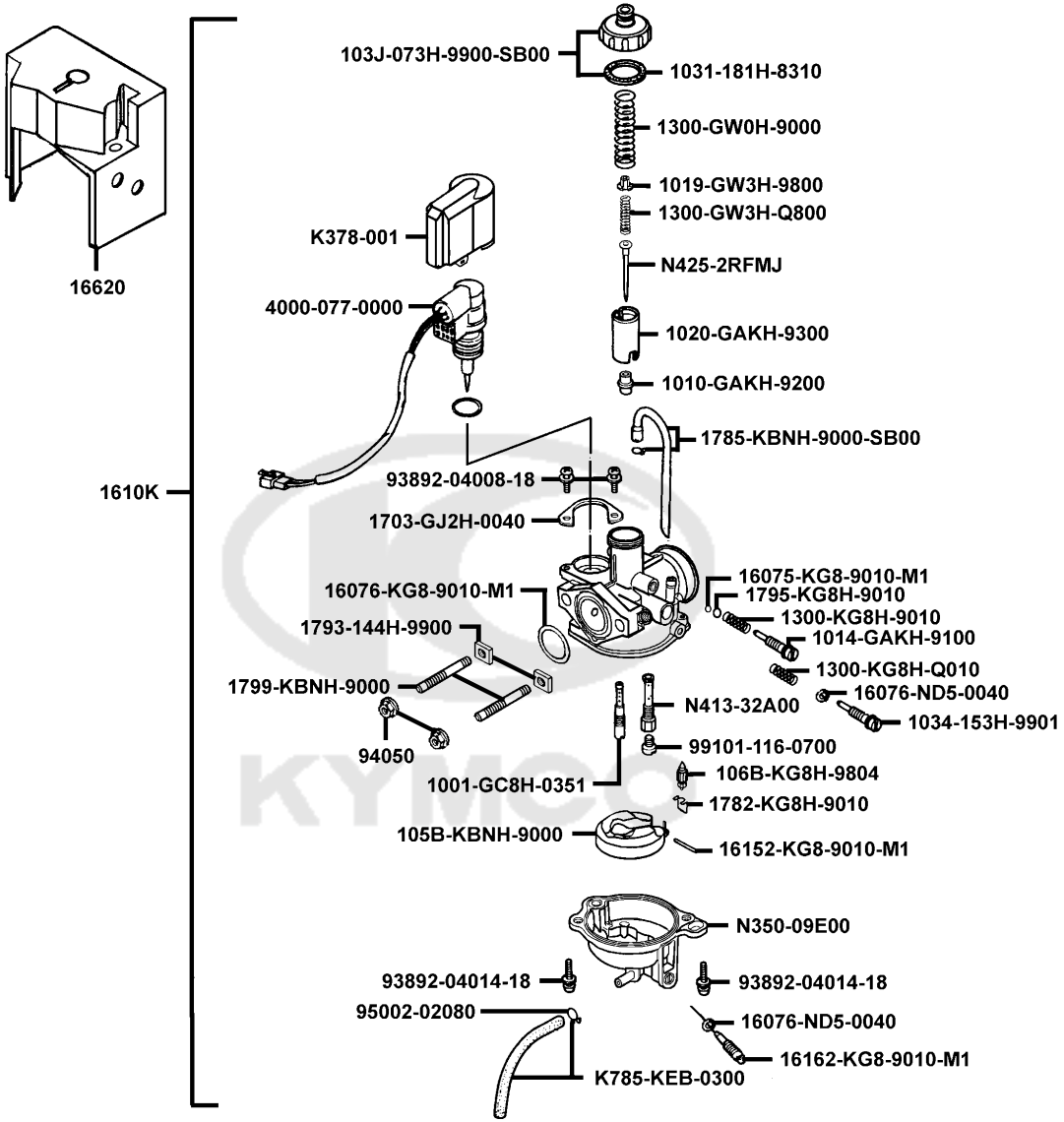
16620
1610K
103J-073H-9900-SB00
1031-181H-8310
1300-GW0H-9000
1019-GW3H-9800
1300-GW3H-Q800
K378-001
N425-2RFMJ
4000-077-0000
1020-GAKH-9300
1010-GAKH-9200
1785-KBNH-9000-SB00
93892-04008-18
1703-GJ2H-0040
16076-KG8-9010-M1
16075-KG8-9010-M1
1795-KG8H-9010
1300-KG8H-9010
1793-144H-9900
1014-GAKH-9100
1300-KG8H-Q010
1799-KBNH-9000
16076-ND5-0040
N413-32A00
1034-153H-9901
94050
99101-116-0700
106B-KG8H-9804
1001-GC8H-0351
1782-KG8H-9010
105B-KBNH-9000
16152-KG8-9010-M1
N350-09E00
93892-04014-18
93892-04014-18
95002-02080
16076-ND5-0040
16162-KG8-9010-M1
K785-KEB-0300

Sales mark	Ref no	Part no	Description	Reg description	Regd no
	16620	16620-LGR4-E10	CAP CARBURETOR	CAP CARBURETOR	2
	1703	1703-GJ2H-0040	SET PLATE	SET PLATE	1
	1782	1782-KG8H-9010	CLIP	CLIP	1
	1785	1785-KBNH-9000-SB00	TUBE SET (A.V)	TUBE SET (A.V)	1
	1793	1793-144H-9900	HEX NUT	HEX NUT	2
	1795	1795-KG8H-9010	WASHER PLAIN	WASHER PLAIN	1
	1799	1799-KBNH-9000	STUD BOLT	STUD BOLT	2
	4000	4000-077-0000	AUTO BYSTARTER SET	AUTO BYSTARTER SET	1
	93892-04008	93892-04008-18	SCREW WASHER 4*8	SCREW WASHER 4*8	2
	93892-04014	93892-04014-18	SCREW WASHER	SCREW WASHER	2
	94050	94050-06080	NUT FLANGE 6MM	NUT FLANGE 6MM	2
	95002	95002-02080	CLIP B8 TUBE	CLIP B8 TUBE	1
	99101	99101-116-0700	MAIN JET	MAIN JET	1
	K378	K378-001	CAP ASSY	CAP ASSY	1
	K785	K785-KEB-0300	TUBE SET (DRAIN)	TUBE SET (DRAIN)	1
	N350	N350-09E00	FLOAT CHAMBER COMP	FLOAT CHAMBER COMP	1
	N413	N413-32A00	NEEDLE JET HOLDER	NEEDLE JET HOLDER	1
	N425	N425-2RFMJ	JET NEEDLE COMP	JET NEEDLE COMP	1

KYMCO

F01	Head Light

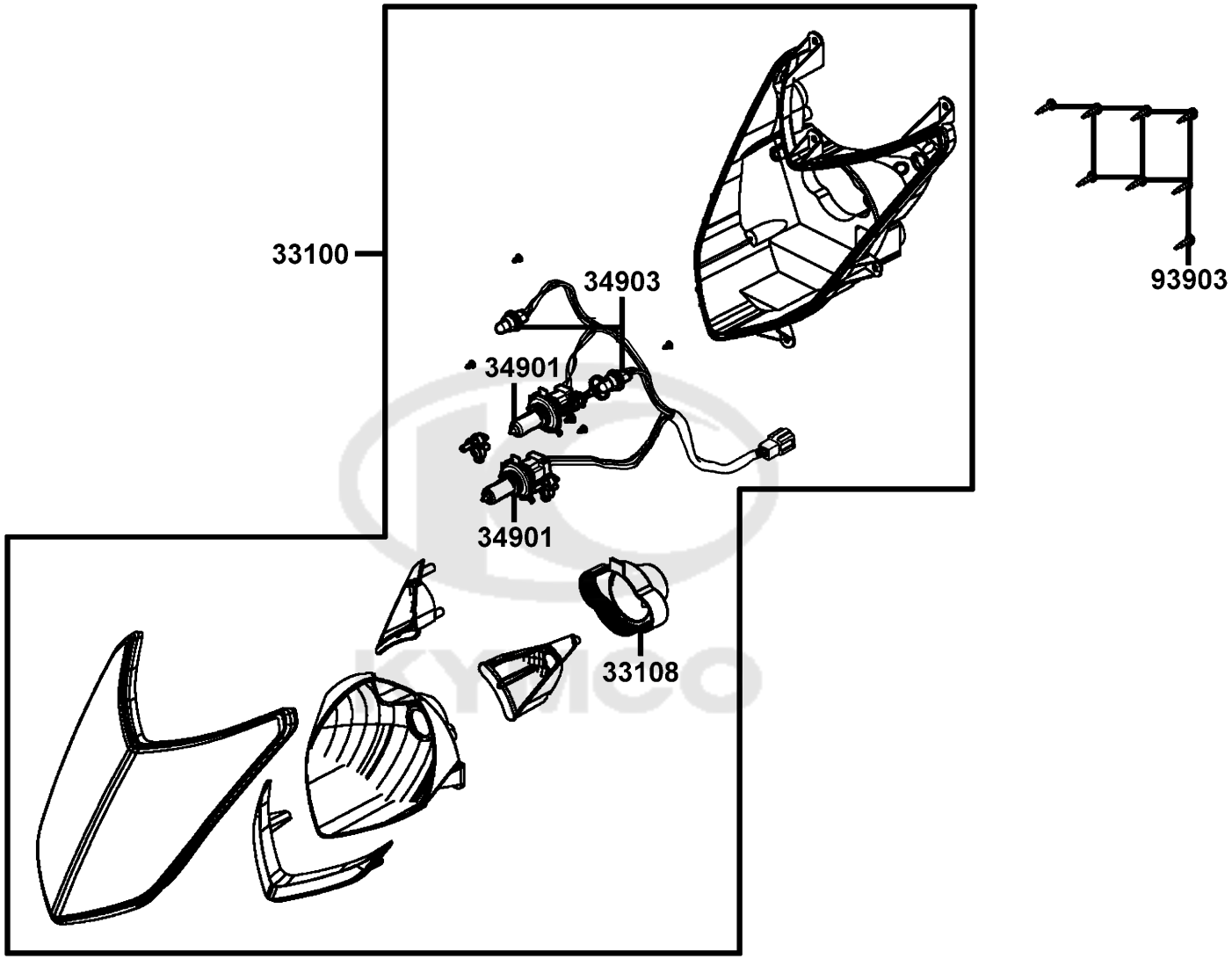

Sales mark	Ref no	Part no	Description	Reg description	Regd no
	33100	33100-LGB5-E10	LIGHT ASSY HEAD	LIGHT ASSY HEAD	1
	33108	33108-LGB5-E10	SOCKET COMP FR COMB	SOCKET COMP FR COMB	1
	34901	34901-LDC8-E10	BULB HEAD LIGHT	BULB HEAD LIGHT	2
	34903	34903-LDC8-E10	BULB POSITION	BULB POSITION	2
	93903	93903-35220	SCREW TAPPING 5*12	SCREW TAPPING 5*12	8

KYMCO

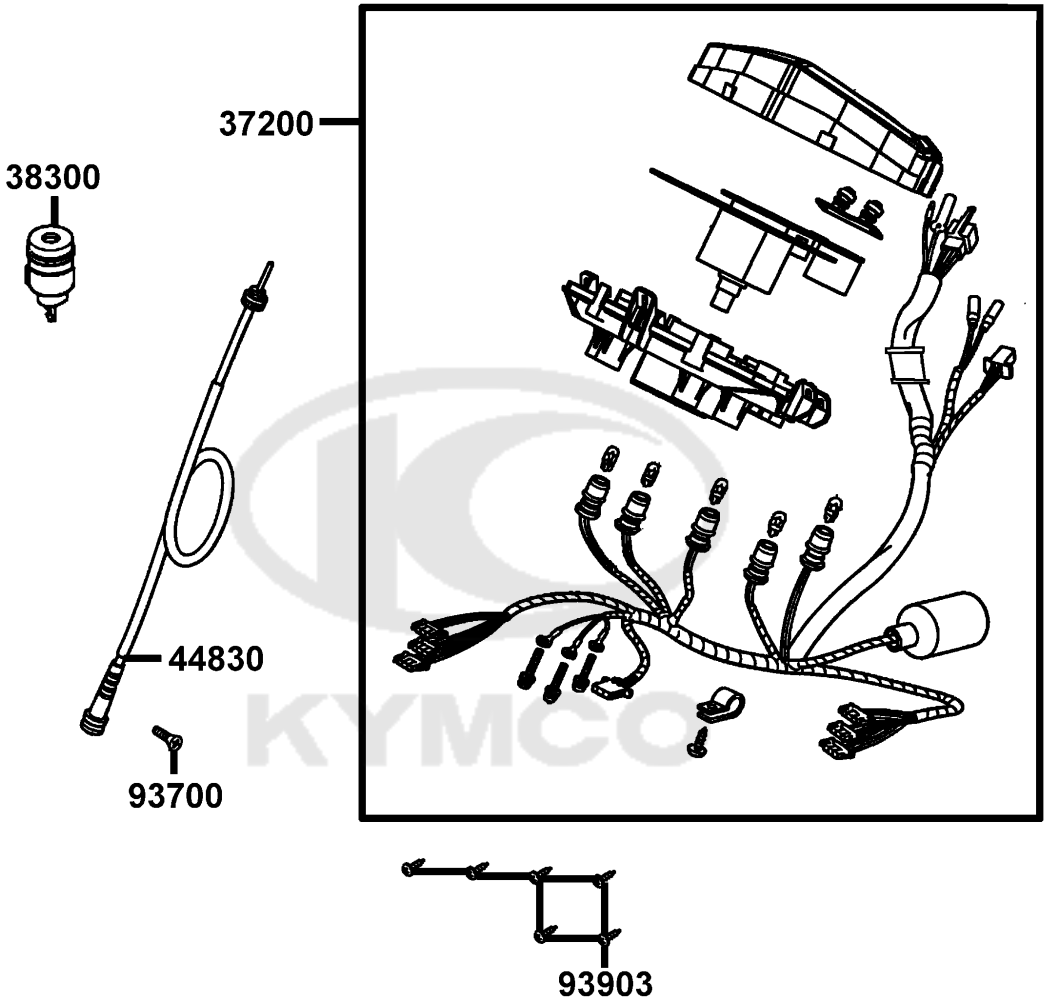
37200
38300
44830
93700
93903

Sales mark	Ref no	Part no	Description	Reg description	Regd no
#	37200	37200-LHM9-E10	SPEED METER ASSY	SPEED METER ASSY	1
	38300	38300-KECE-W10	RELAY ASS'Y WINKER	RELAY ASS'Y WINKER	1
	44830	44830-LHM9-E60	CABLE COMP SPDMT	CABLE COMP SPDMT	1
	93700	93700-05018-0H	SCREW OVAL 5*18	SCREW OVAL 5*18	1
	93903	93903-34380	SCREW TAPPING 4*12	SCREW TAPPING 4*12(K)	6

KYMCO

F03	Handle Steering Handle Cover

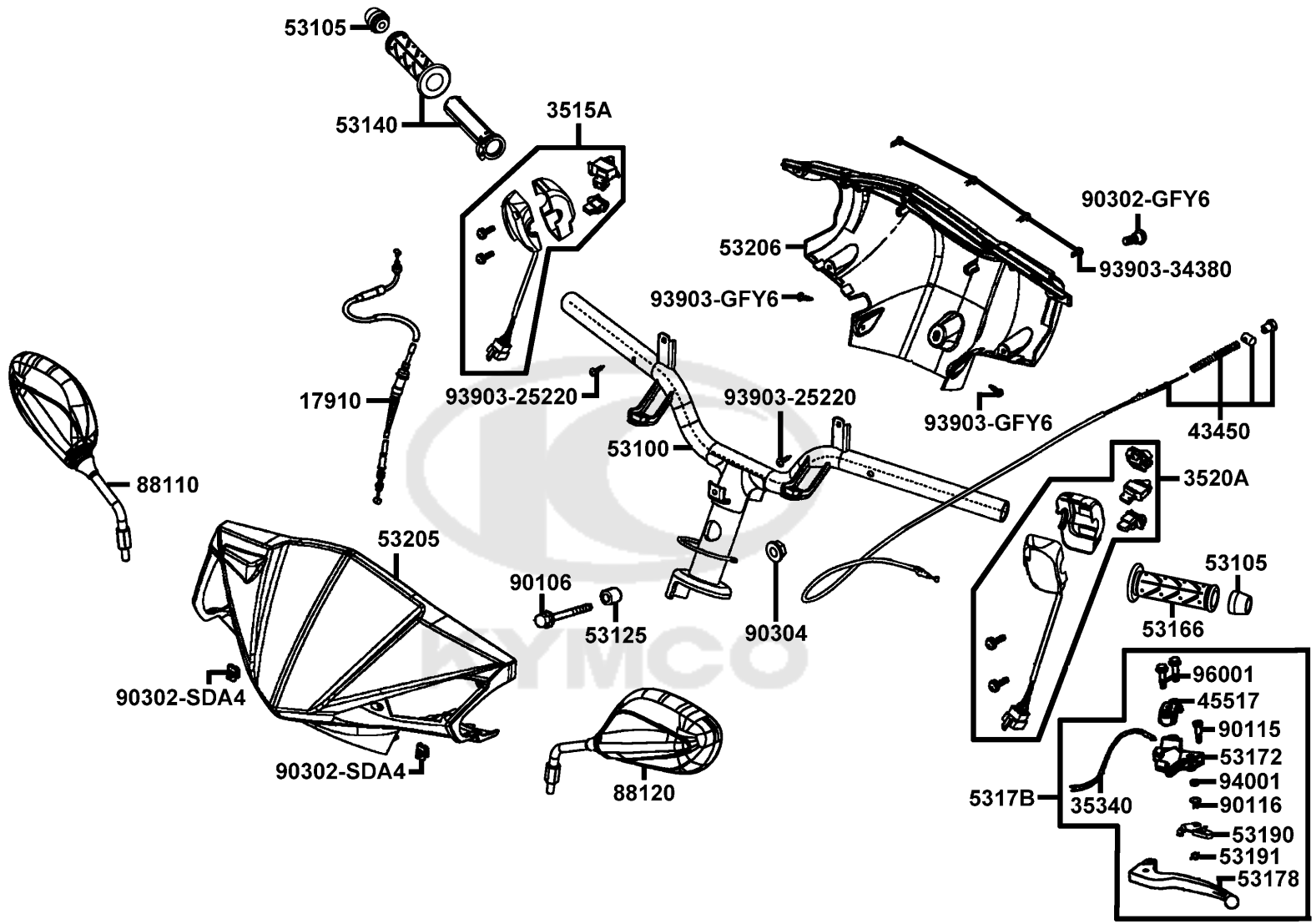

Sales mark	Ref no	Part no	Description	Reg description	Regd no
	17910	17910-LHM9-E11	CABLE COMP THROT	CABLE COMP THROT	1
#	3515A	3515A-LGB5-E10	SW ASSY RH HANDLE COMP	SW ASSY RH HANDLE COMP	1
#	3515A	3515A-LGB5-EV0	SW ASSY RH HANDLE COMP	SW ASSY RH HANDLE COMP	1
	3520A	3520A-LGB5-E11	"SW ASS'Y..LH HANDLE COMP"	"SW ASS'Y..LH HANDLE COMP"	1
	35340	35340-KKJ9-C00	SW ASSY FR STOP	SW ASSY FR STOP	1
	43450	43450-LHM9-E10	CABLE COMP RR BRK	CABLE COMP RR BRK	1
	45517	45517-GFY6-900	HOLDER HNDL BRKT	HOLDER HNDL BRKT	1
	53100	53100-LGB5-E10	HANDLE COMP STRG	HANDLE COMP STRG	1
	53105	53105-KNBN-C00	END STRG HANDLE	END STRG HANDLE	1
	53125	53125-GEN5-C00	COLLAR HANDLE SET	COLLAR HANDLE SET	1
**	53140	53140-KNBN-C00	GRIP COMP THROT	GRIP COMP THROT	1
**	53166	53166-KNBN-C00	GRIP L HANDLE	GRIP L HANDLE	1
	53172	53172-LGB6-E10	BRKT HANDLE L	BRKT HANDLE L	1
**	53178	53178-LGB6-E10	"LEVER L ,STRG HANDL"	"LEVER L ,STRG HANDL"	1
	5317B	5317B-LGB6-E10	BRKT ASSY HNDL LH	BRKT ASSY HNDL LH	1
	53190	53190-GFY6-C00	LEVER COMP P/BRK	LEVER COMP P/BRK	1
	53191	53191-GFY6-C00	SPG PKB LEVER	SPG PKB LEVER	1
**	53205	53205-LGB5-E10	COVER HANDLE FR	COVER HANDLE FR	1
**	53206	53206-LGB5-E10	COVER HANDLE RR	COVER HANDLE RR	1
# **	88110	88110-LEB5-C11	MIRROR ASSY R BACK	MIRROR ASSY R BACK	1

KYMCO

F03	Handle Steering Handle Cover

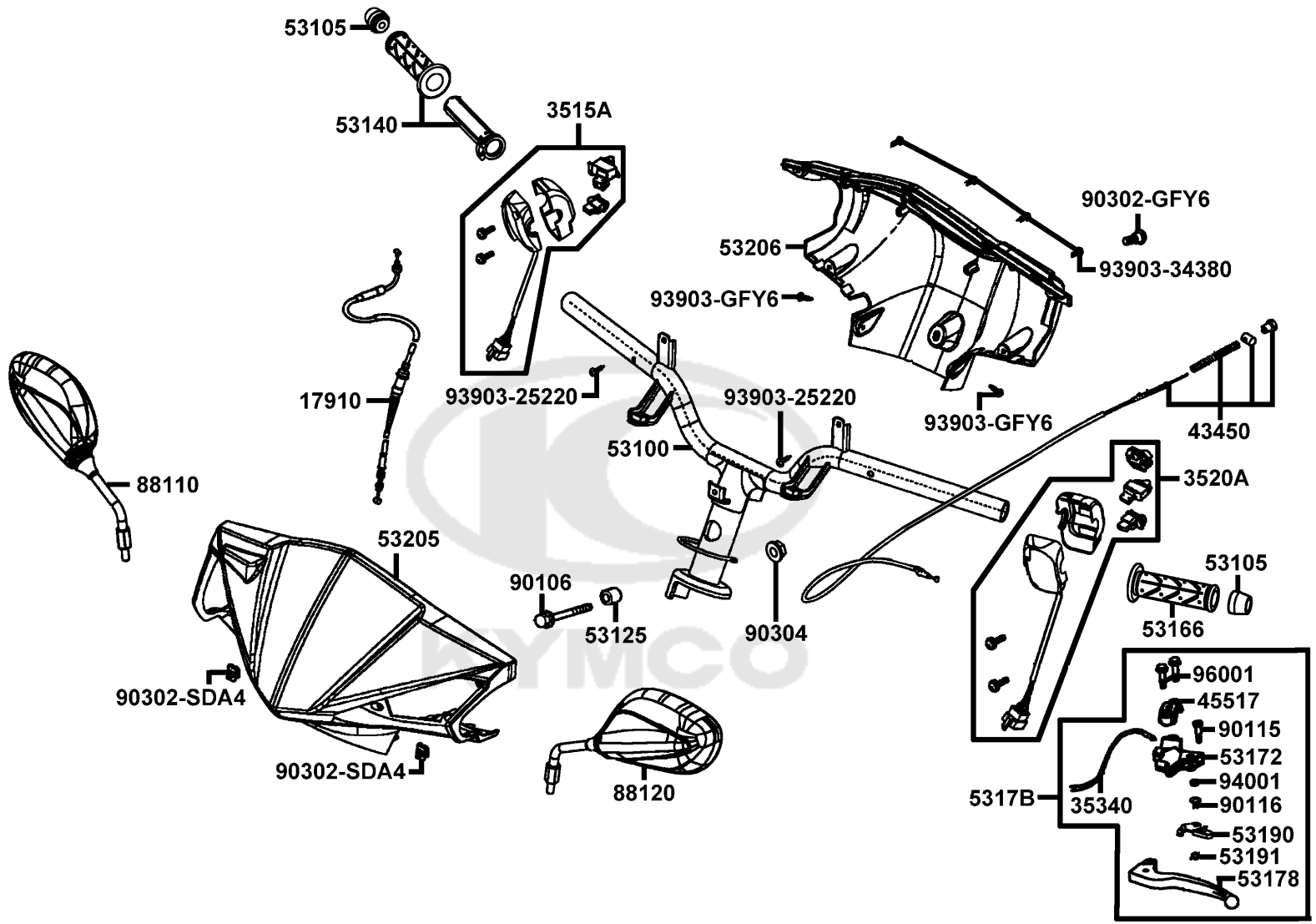

Sales mark	Ref no	Part no	Description	Reg description	Regd no
# **	88120	88120-LEB5-C11	MIRROR ASSY L BACK	MIRROR ASSY L BACK	1
	90106	90106-GEN5-901	BOLT FLANGE 10*50	BOLT FLANGE 10*50	1
	90115	90115-GLE0-C00	BOLT HNDL LEVER PIVOT	BOLT HNDL LEVER PIVOT	1
	90116	90116-GGS7-C00	SCREW P/BRK LEVER PIVOT	SCREW P/BRK LEVER PIVOT	1
	90302-GFY6	90302-GFY6-C00	BOLT WASH 5*12	BOLT WASH 5*12	1
	90302-SDA4	90302-SDA4-C00	NUT SPRING 4MM	NUT SPRING 4MM	1
	90304	90304-GHE8-C00	NUT U 10MM (C)	NUT U 10MM (C)	1
	93903-25220	93903-25220	SCREW TAPPING 5*12	SCREW TAPPING 5*12	1
	93903-34380	93903-34380	SCREW TAPPING 4*12	SCREW TAPPING 4*12(K)	1
	93903-GFY6	93903-GFY6-C01	SCREW TAPPING 4*14(K)	SCREW TAPPING 4*14(K)	1
	94001	94001-12280-0SG	NUT HEX 12MM(C)	NUT HEX 12MM(C)	1
	96001	96001-06025-06	BOLT FLANGE SH 6*25	BOLT FLANGE SH 6*25	1

KYMCO

Brake Master Cylinder

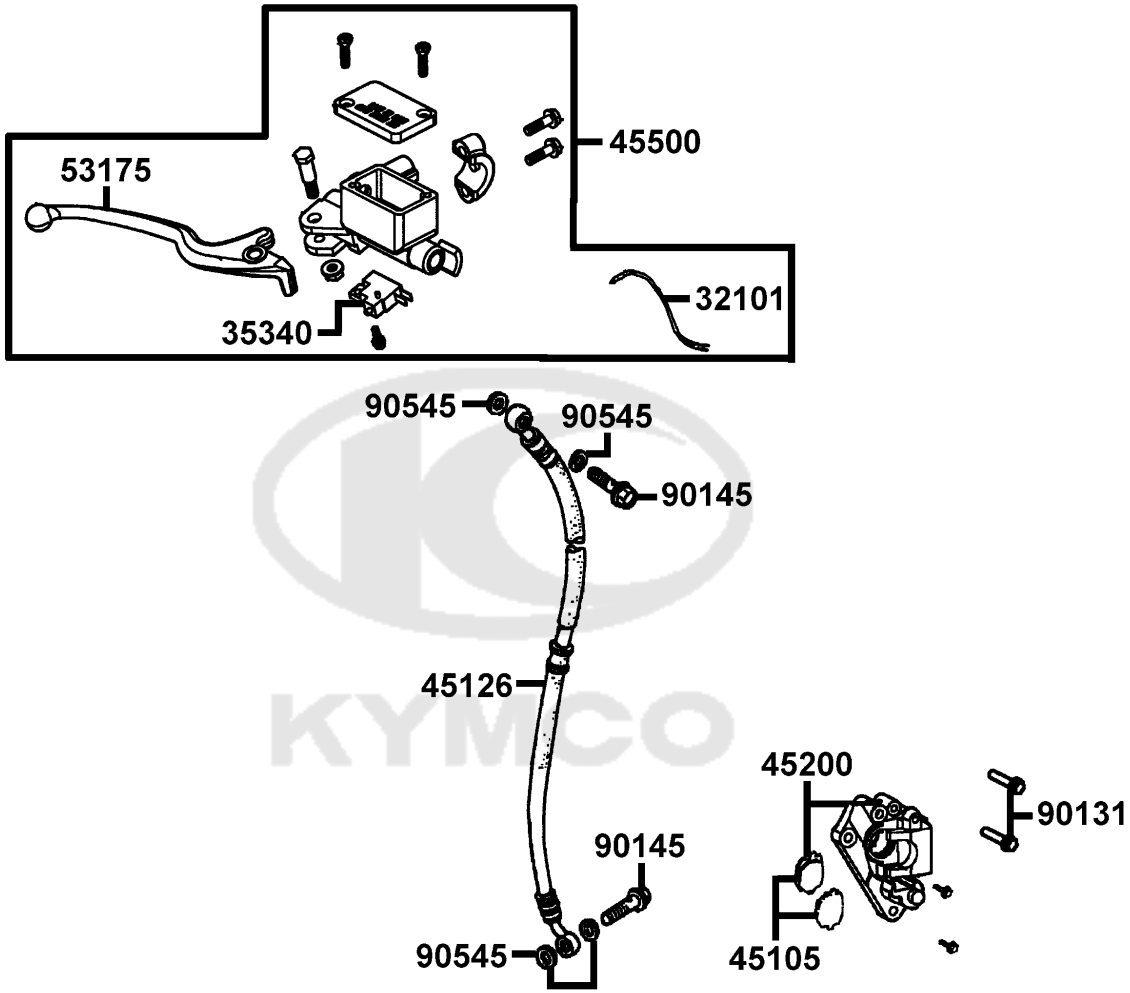

Sales mark	Ref no	Part no	Description	Reg description	Regd no
	32101	32101-GFY6-C00	SUB CORD R	SUB CORD R	1
	35340	35340-KNBN-901	SW ASSY FR STOP	SW ASSY FR STOP	1
	45105	45105-LDC8-305	PAD COMP A+B	PAD COMP A+B	1
	45126	45126-LHM9-E60	HOSE ASSY FR BRK	HOSE ASSY FR BRK	1
**	45200	45200-LGB5-E10	CALIPER ASSY L FR	CALIPER ASSY L FR	1
	45500	45500-LDC8-E10	M/C ASSY FR	M/C ASSY FR	1
**	53175	53175-LDC8-E10	LEVER R STRG HNDL	LEVER R STRG HNDL	1
	90131	90131-GLW0-C00	BOLT FLANGE 8*35	BOLT FLANGE 8*35	1
	90145	90145-9A61-C00	OIL BOLT 10*22	OIL BOLT 10*22	2
	90545	90545-3L00-C00	WASHER OIL BOLT	WASHER OIL BOLT	4

KYMCO

F05	Front Cover

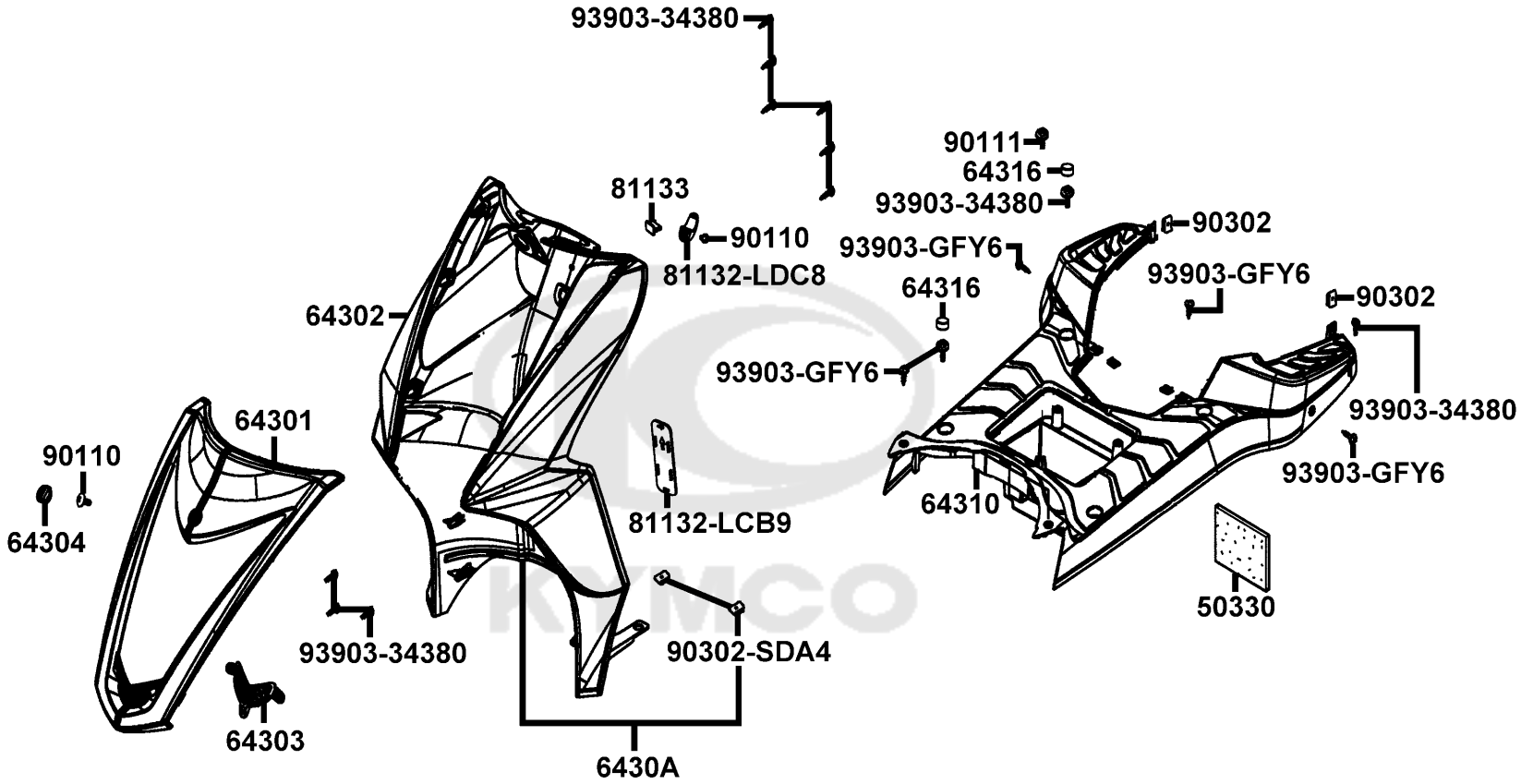

Sales mark	Ref no	Part no	Description	Reg description	Regd no
	50330	50330-KEBE-C00	SEAL BATTERY FRONT	SEAL BATTERY FRONT	1
**	64301	64301-LGB5-E10	COVER FRONT	COVER FRONT	1
	64302	64302-LGB5-E10	MOLDING FRONT	MOLD FRONT	1
**	64303	64303-LGB5-E10	GRILL FRONT	GRILL FRONT	1
**	64304	64304-LGB5-E10	CAP FRONT COVER	CAP FRONT COVER	1
**	6430A	6430A-LGB5-E10	MOLD FRONT ASSY	MOLD FRONT ASSY	1
**	64310	64310-LGB5-E10	FLOOR PANEL	FLOOR PANEL	1
**	64316	64316-LCB9-C10	PLUG FLOOR	PLUG FLOOR	4
**	81132-LCB9	81132-LCB9-C10	LID LEG SHIELD	LID LEG SHIELD	1
**	81132-LDC8	81132-LDC8-E10	HOOK LUGGAGE	HOOK LUGGAGE	1
	81133	81133-KNBN-C00	STOPPER LUGGAGE	STOPPER LUGGAGE	1
	90110	90110-GLW0-C00	SCREW SPECIFIED 6*14	SCREW SPECIFIED 6*14	1
	90111	90111-1G87-C01	BOLT FLANGE 6MM	BOLT FLANGE 6MM	1
	90302	90302-SDA4-C00	NUT SPRING 4MM	NUT SPRING 4MM	1
	93903-34380	93903-34380	SCREW TAPPING 4*12	SCREW TAPPING 4*12(K)	11
	93903-GFY6	93903-GFY6-C01	SCREW TAPPING 4*14(K)	SCREW TAPPING 4*14(K)	1

KYMCO

F06	Stem Steering Front Cushion

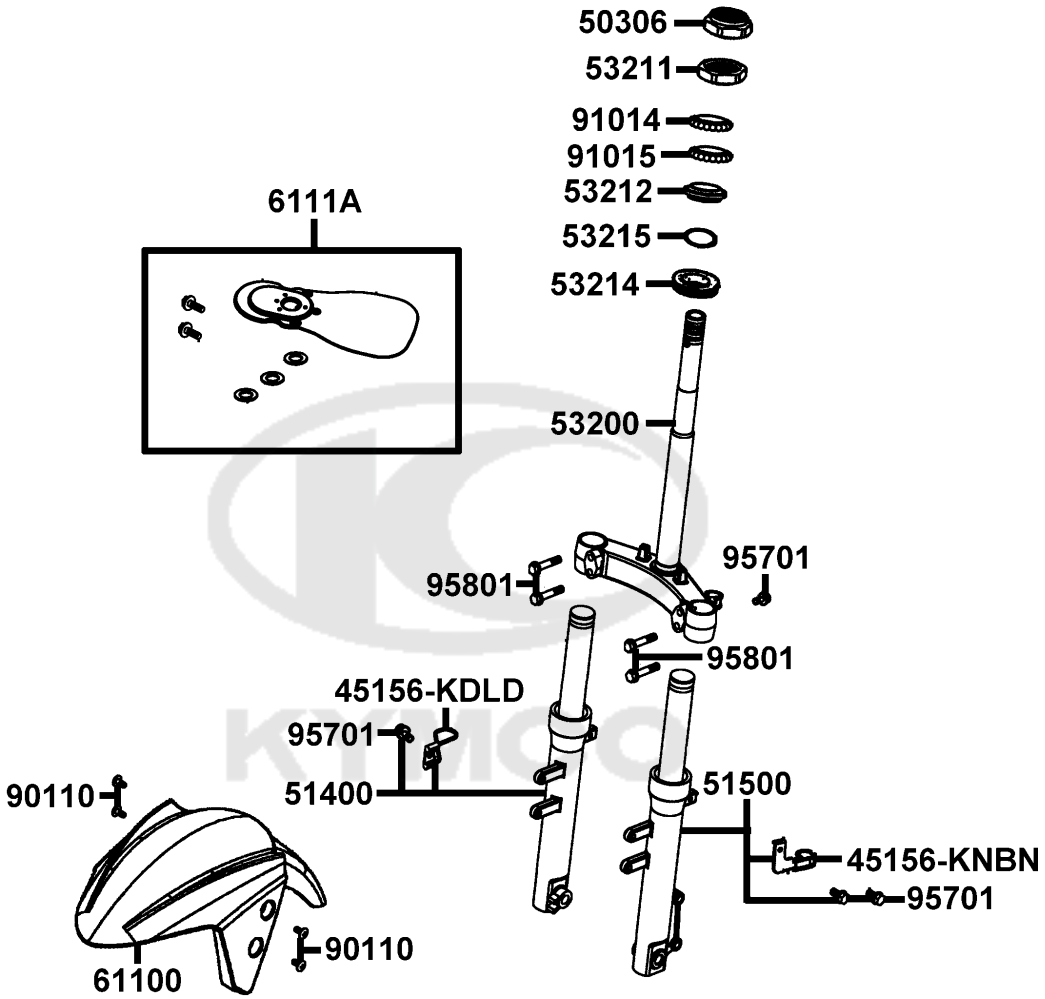

Sales mark	Ref no	Part no	Description	Reg description	Regd no
	45156-KDLD	45156-KDLD-C00	CLAMPER FR BRK HOSE	CLAMPER FR BRK HOSE	1
	45156-KNBN	45156-KNBN-C00	CLAMPER FR BRAKE HOSE	CLAMPER FR BRAKE HOSE	1
	50306	50306-1F96-C00	NUT STRG STEM LOCK	NUT STRG STEM LOCK	1
**	51400	51400-LGB5-E10	FORK ASSY FR R/L	FORK ASSY FR R/L	1
**	51500	51500-LGB5-E10	FORK ASSY FR L	FORK ASSY FR L	1
	53200	53200-LDC8-E91	STEM COMP STRG	STEM COMP STRG	1
	53211	53211-GFY6-C00	RACE STRG. CONE TOP	RACE STRG TOP CONE	1
	53212	53212-2L50-C00	RACE STRG. BOTTOM CONE	RACE (STRG BOTTOM) CONE	1
	53214	53214-2L50-C00	DUST SEAL STRG HEAD	DUST SEAL STRG HEAD	1
	53215	53215-2L50-C00	WASHER STRG HDL DUST-SEAL	WASHER STRG HDL DUST-SEAL	1
**	61100	61100-LGB5-E10	FENDER FRONT	FENDER FRONT	1
	6111A	6111A-LDC8-E90	FENDERMFR. INNER ASSY	FENDERMFR. INNER ASSY	1
	90110	90110-KEB7-C00	SCREW SPECIAL 6*14	SCREW SPECIAL 6*14	1
	91014	91014-LLJ3-C00	CAGE STRG TOPP	CAGE STRG TOPP	1
	91015	91015-LLJ3-C00	CAGE STRG BOT	CAGE STRG BOT	1
	95701	95701-06012-08	BOLT FLANGE 6*12	BOLT FLANGE 6*12	4
	95801	95801-08040-08	BOLT FLANGE 8*40	BOLT FLANGE 8*40	4

KYMCO

F07	Front Wheel

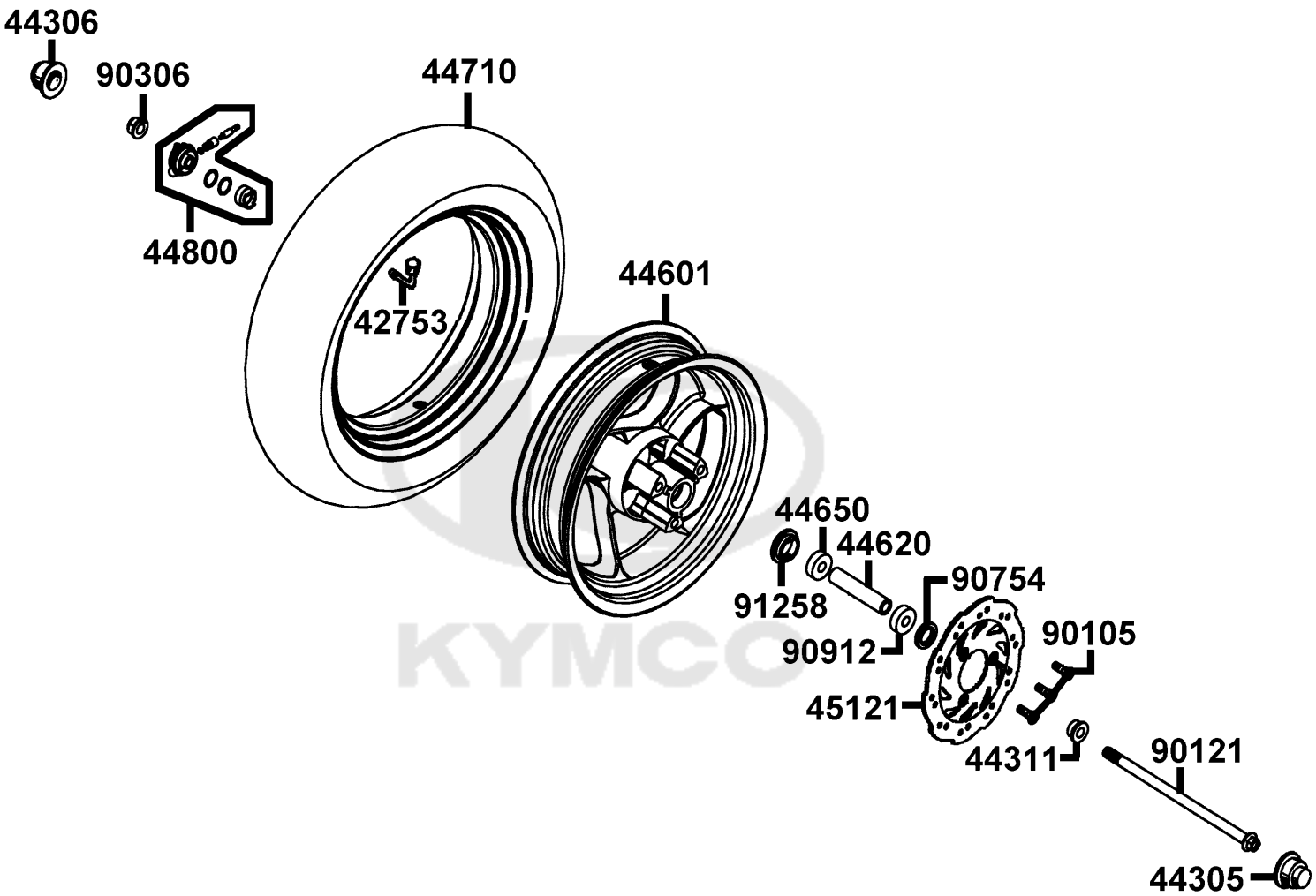

Sales mark	Ref no	Part no	Description	Reg description	Regd no
	42753	42753-0A01-C00	VALVE (TR 412) & CAP (C)	VALVE (TR 412) & CAP (C)	1
	44305	44305-KGE2-E00	AXLE PROTECTOR L	AXLE PROTECTOR L	1
	44306	44306-KGE2-E00	AXLE PROTECTOR R	AXLE PROTECTOR R	1
	44311	44311-GLW0-W10	CLLAR FR WHEEL SIDE	CLLAR FR WHEEL SIDE	1
**	44601	44601-LGB5-E10	WHEEL COMP FR CAST	WHEEL COMP FR CAST	1
	44620	44620-KEB7-C00	COLLAR FR DIST	COLLAR FR DIST	1
	44710	44710-LDC8-E11	TIRE ASSYFR	TIRE ASSYFR	1
	44800	44800-LDC8-E10	GEAR BOX ASSY SPDMT	GEAR BOX ASSY SPDMT	1
	45121	45121-LGB5-E80	DISK FR BRAKE	DISK FR BRAKE	1
	90105	90105-KCR3-001	BOLT FR DISK 8*24	BOLT FR DISK 8*24	3
	90121	90121-KBE2-C00	BOLT RR FORK PIVOT	BOLT RR FORK PIVOT	1
	90306	90306-KLF0-C00	NUT FLANGE 12MM	NUT FLANGE 12MM	1
	90754	90754-GHC8-C00	DUST SEAL 20*32*5	DUST SEAL 20*32*5	1
#	90912	90912-GHC8-C00	BEARING 6201 (U) (NTN)	BEARING 6201 (U) (NTN)	2
	91258	91258-KAM1-C00	SEAL SPDMT GEAR BOX	SEAL SPDMT GEAR BOX	1

KYMCO

Rear Wheel

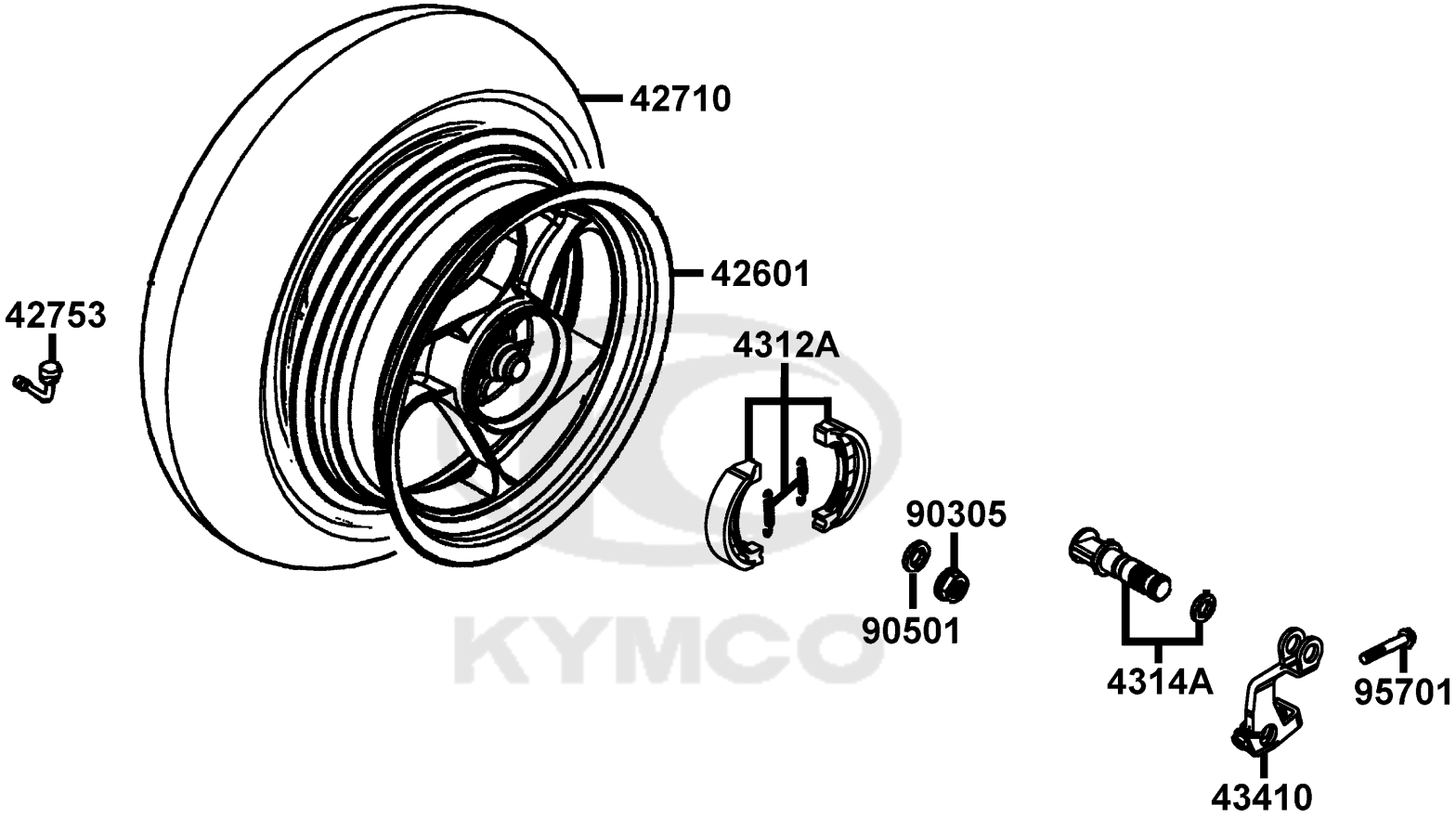

Sales mark	Ref no	Part no	Description	Reg description	Regd no
**	42601	42601-LGB5-E10	WHEEL CAST RR	WHEEL CAST RR	1
	42710	42710-LDC8-E11	TIRE ASSY RR	TIRE ASSY RR	1
	42753	42753-0A01-C00	VALVE (TR 412) & CAP (C)	VALVE (TR 412) & CAP (C)	1
	4312A	4312A-KXCX-C00	SHOE ASSY RR BRAKE	SHOE ASSY RR BRAKE	1
	4314A	4314A-KKD6-E00	CAM ASSY RR BRAKE	CAM ASSY RR BRAKE	1
	43410	43410-KFA1-C00	ARM RR BRK	ARM RR BRK	1
	90305	90305-KNBN-C00	NUT U 16MM(C)	NUT U 16MM(C)	1
	90501	90501-KNBN-C00	WASHER 16MM	WASHER 16MM	1
	95701	95701-06032-08	BOLT FLANGE 6*32	BOLT FLANGE 6*32	1

KYMCO

F09	Seat

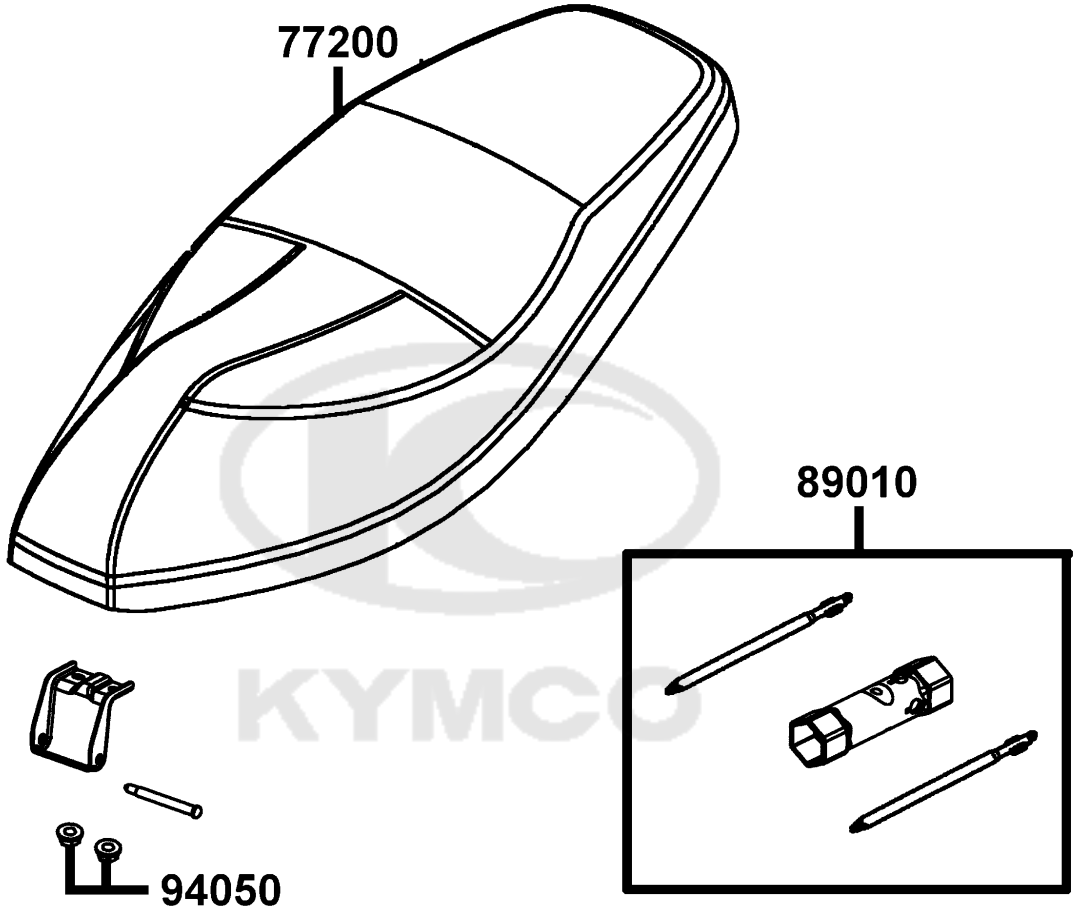

Sales mark	Ref no	Part no	Description	Reg description	Regd no
**	77200	77200-LGB5-E10	SEAT ASSY	SEAT ASSY	1
	89010	89010-KGBG-C00	TOOL SET	TOOL SET	1
	94050	94050-06080	NUT FLANGE 6MM	NUT FLANGE 6MM	2

KYMCO

F10	Fuel Tank

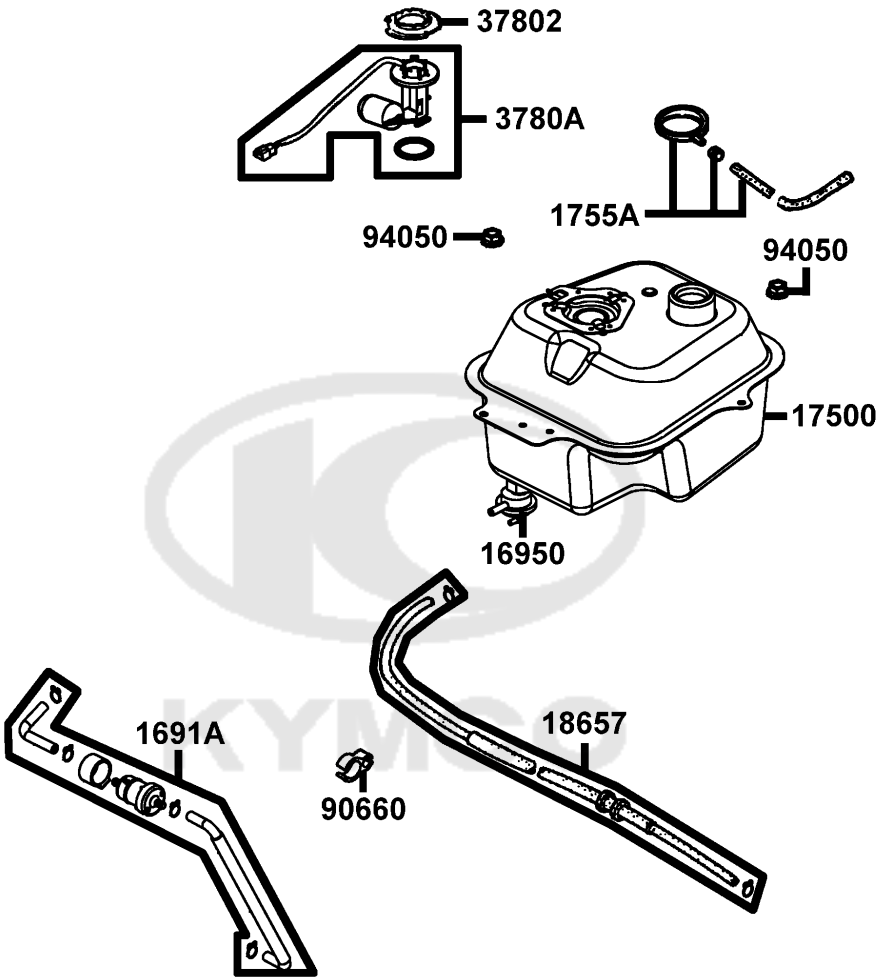

Sales mark	Ref no	Part no	Description	Reg description	Regd no
	1691A	1691A-LHM9-E10	STRAINER ASSY FUEL	STRAINER ASSY FUEL	1
	16950	16950-KKJ9-752	AUTO COCK ASSY FUEL	AUTO COCK ASSY FUEL	1
	17500	17500-LCB9-C10	TANK COMP FUEL	TANK COMP FUEL	1
	1755A	1755A-KKD5-C10	TRAY ASSY FUEL CAP	TRAY ASSY FUEL CAP	1
	18657	18657-LEH2-B50	TUBE ASSY AICV-INLET PIPE	TUBE ASSY PUMP-INLET PIPE	1
	37802	37802-GGA7-C00	RET FUEL UNIT	RET FUEL UNIT	1
	3780A	3780A-LDC8-E10	FUEL UNIT ASSY	FUEL UNIT ASSY	1
	90660	90660-KGBG-C00	CLAMPER TUBE	CLAMPER TUBE	1
	94050	94050-06080	NUT FLANGE 6MM	NUT FLANGE 6MM	2

KYMCO

F11	Battery

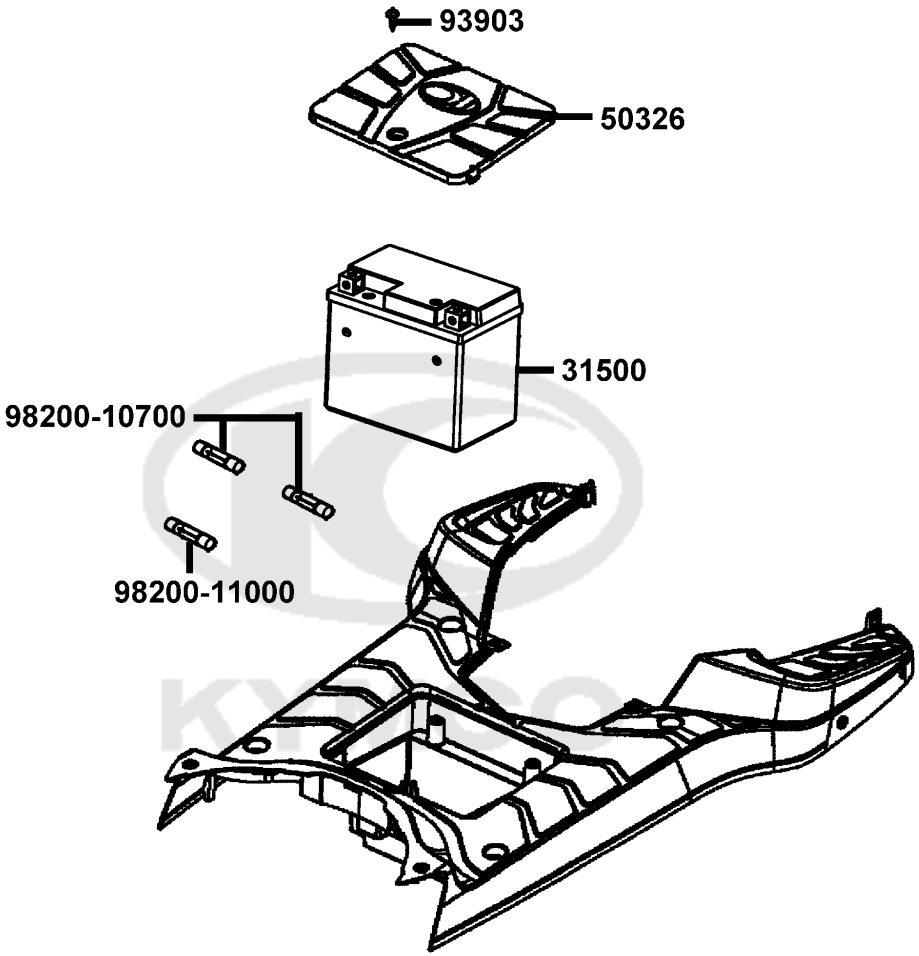

Sales mark	Ref no	Part no	Description	Reg description	Regd no
	31500	31500-GFY6-E00	GTX7A-BS	GTX7A-BS	1
**	50326	50326-LGB5-E10	COVER BATTERY	COVER BATTERY	1
	93903	93903-35380	SCREW TAPPING 5*16 (K)	SCREW TAPPING 5*16 (K)	1
	98200-10700	98200-10700	FUSE A7	FUSE 7A	2
	98200-11000	98200-11000	FUSE A10	FUSE 10A	1

KYMCO

F12	Tank Oil

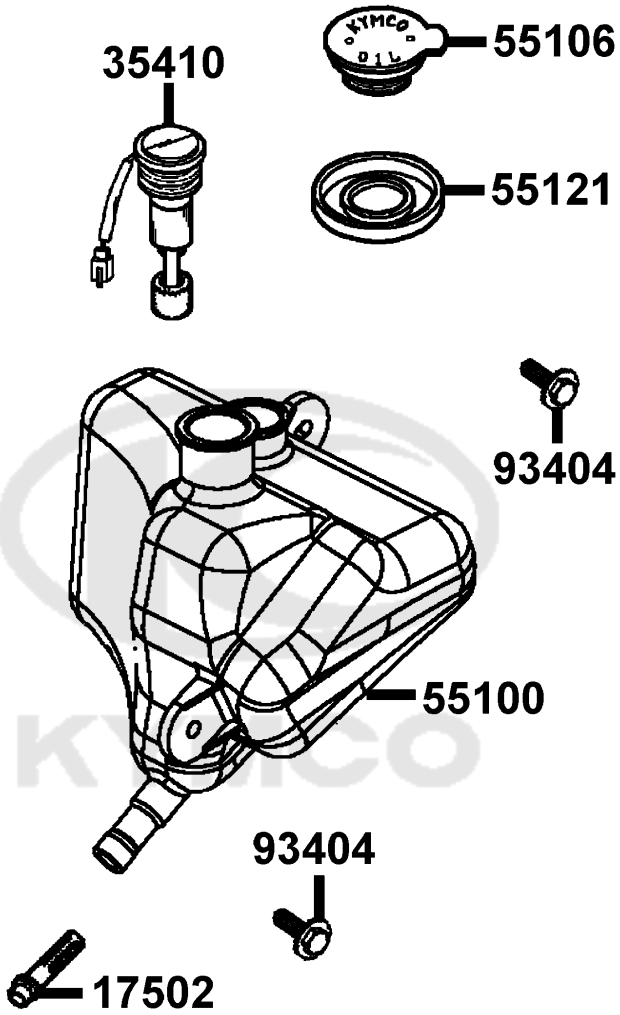

Sales mark	Ref no	Part no	Description	Reg description	Regd no
	17502	17502-1G87-001	OIL STRAINER	OIL STRAINER	1
	35410	35410-LHM9-E10	SW COMP OIL LEVEL	SW COMP OIL LEVEL	1
	55100	55100-LHM9-E10	TANK ASSY OIL	TANK ASSY OIL	1
	55106	55106-KEB7-C00	CAP TANK OIL	CAP TANK OIL	1
	55121	55121-LCD1-C00	RUBBER OIL GUIDE	RUBBER OIL GUIDE	1
	93404	93404-06016-07	BOTL WASHER 6*16	BOTL WASHER 6*16	2

KYMCO

F13	Cover Body Cover Center

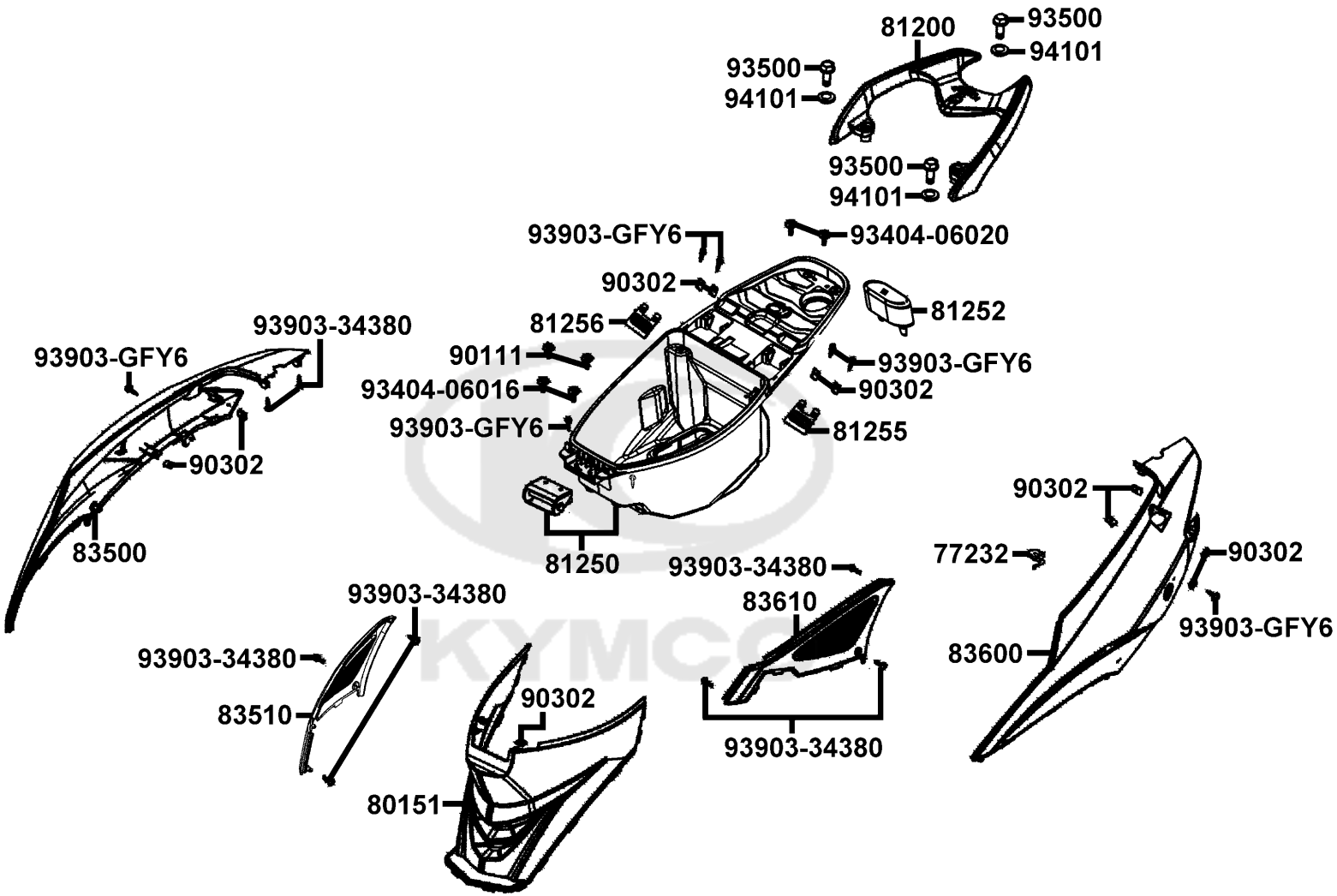

Sales mark	Ref no	Part no	Description	Reg description	Regd no
	77232	77232-KCAC-C00	SET SPG SEAT LOCK	SET SPG SEAT LOCK	1
**	80151	80151-LGB5-E10	COVER CENTER	COVER CENTER	1
**	81200	81200-LGB5-E10	CARRIER REAR	CARRIER REAR	1
**	81250	81250-LHM9-E10	BOX ASSY LUGGAGE	BOX ASSY LUGGAGE	1
	81252	81252-LGB5-E10	BOX LUGGAGE RUBBER	BOX LUGGAGE RUBBER	2
**	81255	81255-LGB5-E10	COVER R BOX LUGGAGE	COVER R BOX LUGGAGE	1
**	81256	81256-LGB5-E10	COVER L BOX LUGGAGE	COVER L BOX LUGGAGE	1
**	83500	83500-LGB5-E10	COVER R BODY SIDE	COVER R BODY SIDE	1
**	83510	83510-LGB5-E10	GRILL R SIDE	GRILL R SIDE	1
**	83600	83600-LGB5-E10	COVER L BODY SIDE	COVER L BODY SIDE	1
**	83610	83610-LGB5-E10	COVER L SIDE	COVER L SIDE	1
	90111	90111-1G87-C01	BOLT FLANGE 6MM	BOLT FLANGE 6MM	1
	90302	90302-SDA4-C00	NUT SPRING 4MM	NUT SPRING 4MM	1
	93404-06016	93404-06016-07	BOTL WASHER 6*16	BOTL WASHER 6*16	2
	93404-06020	93404-06020-07	BOLT WASHER 6*20 (K)	BOLT WASHER 6*20 (K)	2
	93500	93500-LGB5-E10	BOLT SPECIAL 8*35	BOLT SPECIAL 8*35	3
	93903-34380	93903-34380	SCREW TAPPING 4*12	SCREW TAPPING 4*12(K)	8
	93903-GFY6	93903-GFY6-C01	SCREW TAPPING 4*14(K)	SCREW TAPPING 4*14(K)	1
	94101	94101-LGB5-E10	WASHER	WASHER	3

KYMCO

Air Cleaner

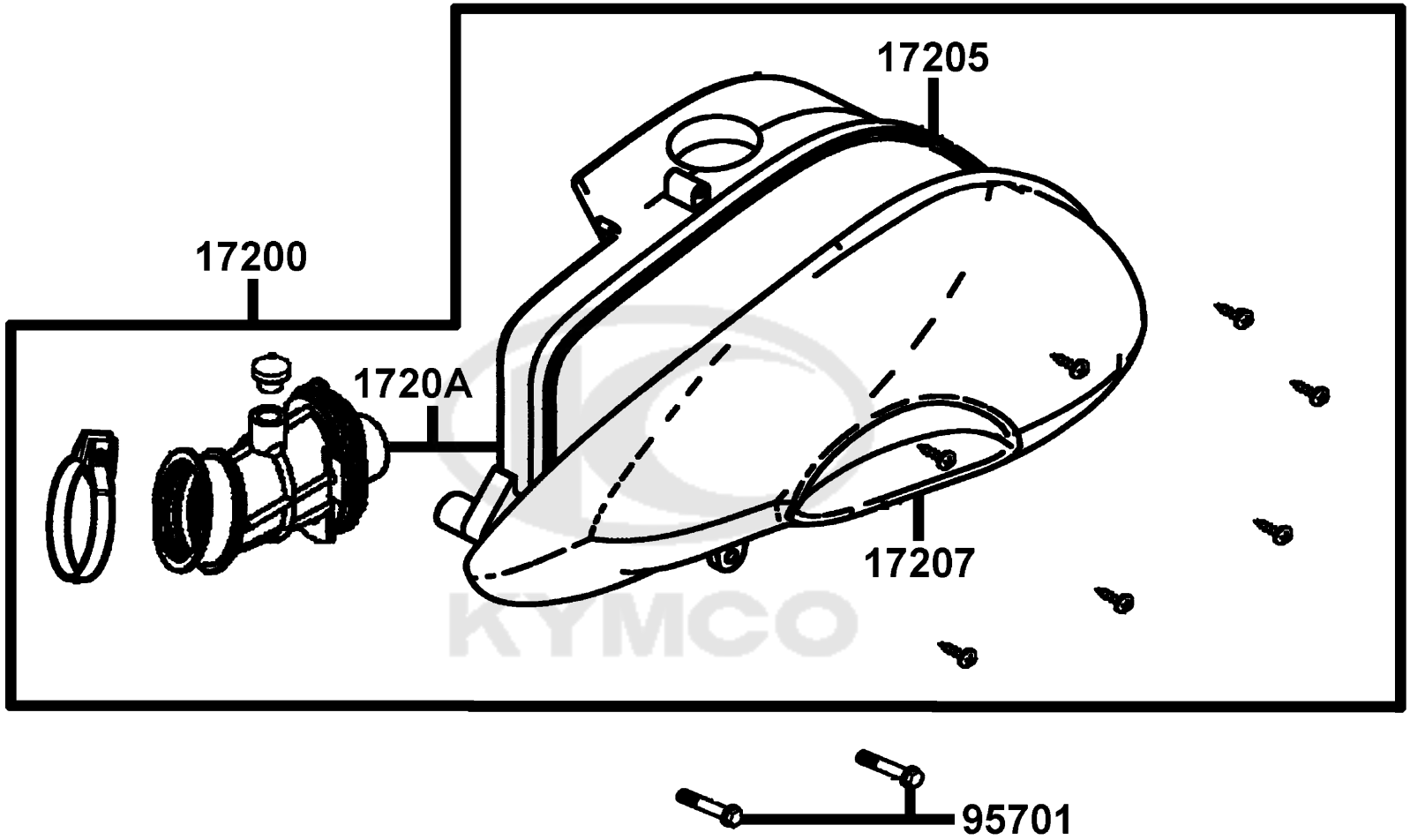

Sales mark	Ref no	Part no	Description	Reg description	Regd no
	17200	17200-LHM9-E10	AIR/C ASSY	AIR/C ASSY	1
	17205	17205-LHM9-E10	ELEMENT AIR/C	ELEMENT AIR/C	1
	17207	17207-KEB7-900	COVER A/C	COVER AIR/C	1
	1720A	1720A-KEB7-E00	CASE ASSY AIR/C	CASE ASSY AIR/C	1
	95701	95701-06040-08	BOLT FLANGE 6*40	BOLT FLANGE 6*40	2

KYMCO

F15	Exhaust Muffler

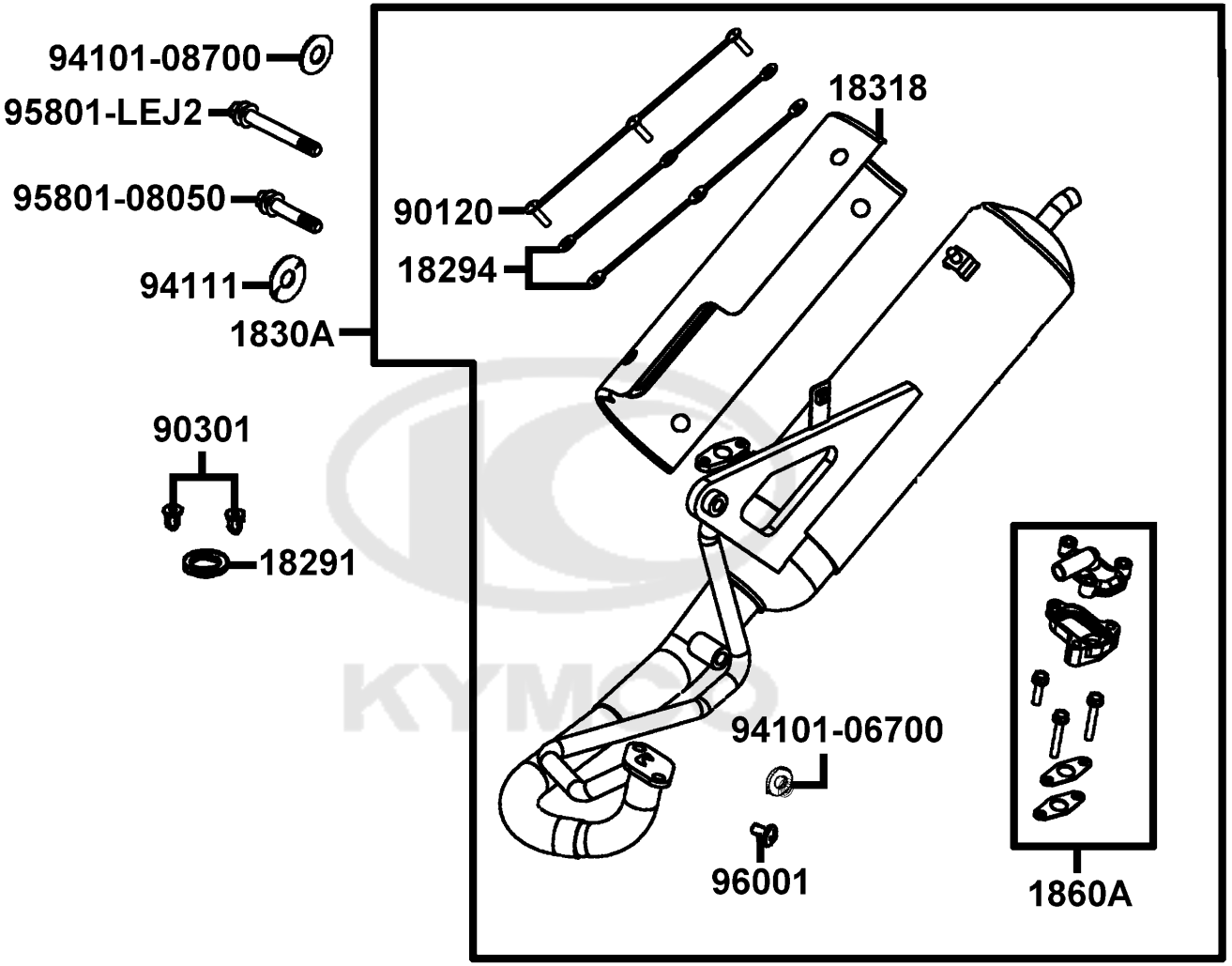

Sales mark	Ref no	Part no	Description	Reg description	Regd no
	18291	18291-LHB3-E11	GASKET EXH PIPE	GASKET EXH PIPE	1
#	18294	18294-PUA3-B50	PACKING PTOTECTOR	PACKING PTOTECTOR	1
	1830A	1830A-LHM9-E10	MUFFLER ASSY EXHAUST	MUFFLER ASSY EXHAUST	1
**	18318	18318-LGR4-E10	PROTECTOR MUFFLER	PROTECTOR MUFFLER	1
	1860A	1860A-KFB5-C00	REED VALVE ASSY	REED VALVE ASSY	1
	90120	90120-KEC2-C00	SOCKET BOLT SPECIAL 6*13	SOCKET BOLT SPECIAL 6*13	1
	90301	90301-KGBG-C00	NUT CAP 6MM	NUT CAP 6MM	2
	94101-06700	94101-06700	WASHER PLAIN 6MM	WASHER PLAIN 6MM	1
	94101-08700	94101-08700	WASHER PLAIN 8MM	WASHER PLAIN 8MM	1
	94111	94111-08800	WASHER SPG 8MM	WASHER SPG 8MM	1
	95801-08050	95801-08050-07	BOLT FLANGE 8*50 (K)	BOLT FLANGE 8*50 (K)	1
	95801-LEJ2	95801-LEJ2-E10	BOLT TORX M8*75	BOLT TORX M8*75	1
	96001	96001-06008-07	BOLT FLANGE SH 6*8	BOLT FLANGE SH 6*8	1

KYMCO

F16	Stand Kick Starter Arm

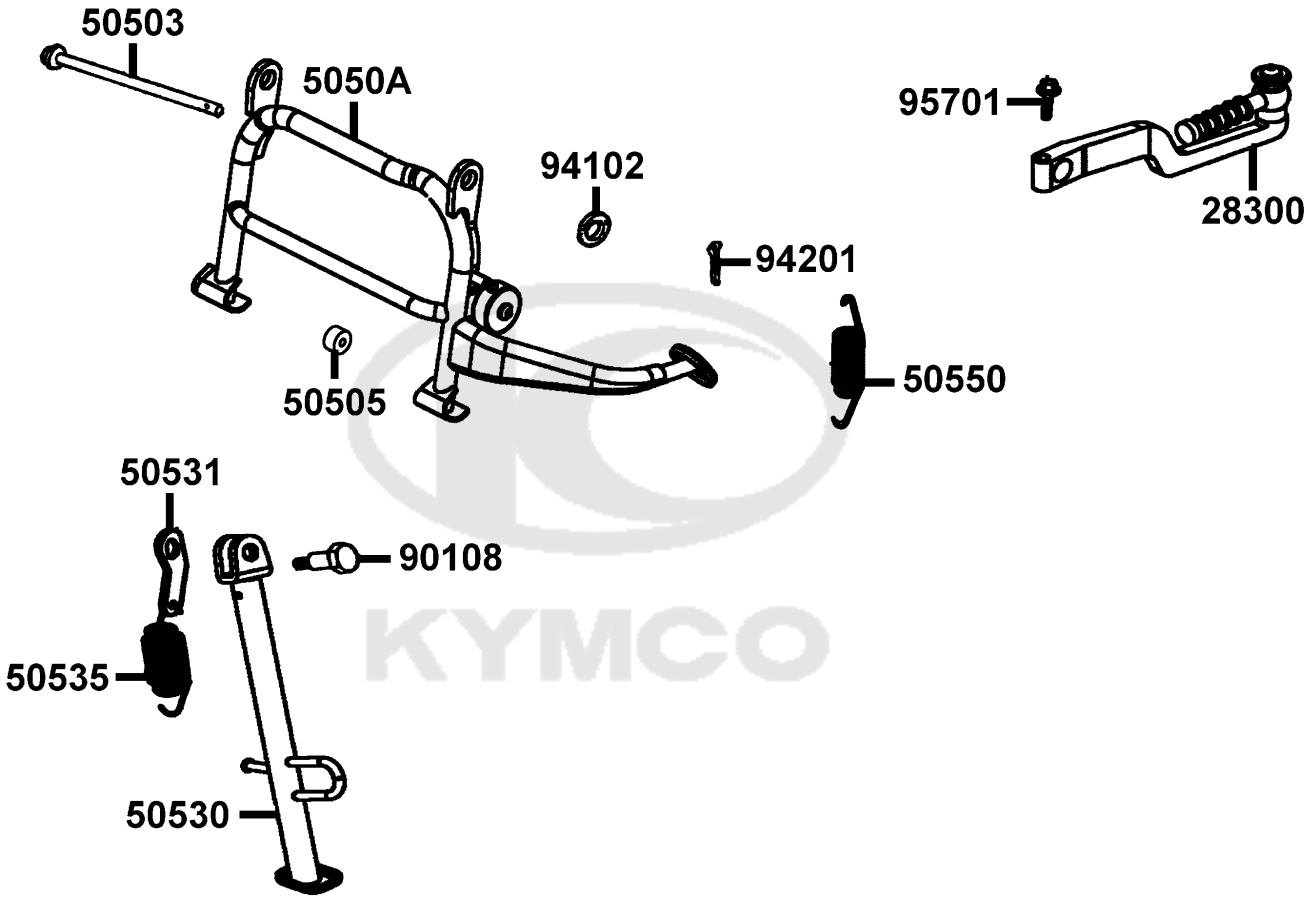

Sales mark	Ref no	Part no	Description	Reg description	Regd no
	28300	28300-LHB3-E10	ARM ASSY KICK STARTER	ARM ASSY KICK STARTER	1
	50503	50503-KEB7-C00	SHAFT MAIN STAND	SHAFT MAIN STAND	1
	50505	50505-LAD9-C00	STOPPER RUBBER	STOPPER RUBBER	1
	5050A	5050A-LHM9-E10	STAND ASSY MAIN	STAND ASSY MAIN	1
	50530	50530-LGB5-E10	SIDE STAND COMP	SIDE STAND COMP	1
	50531	50531-KEB7-C00	PLATE SPRING STOPPER	PLATE SPRING STOPPER	1
	50535	50535-KEB7-W10	SPRING COMP SIDE STAND	SPRING COMP SIDE STAND	1
	50550	50550-KEB7-C00	SPG MAIN STAND COMP	SPG MAIN STAND COMP	1
	90108	90108-KEB7-E00	SCREW SIDE STAND PIVOT	SCREW SIDE STAND PIVOT	1
	94102	94102-08800	WASHER PLAIN 8MM	WASHER PLAIN 8MM (C)	1
	94201	94201-20150	PIN SPLIT 2*15	PIN SPLIT 2*15	1
	95701	95701-06022-07	BOLT FLANGE 6*22	BOLT FLANGE 6*22	1

KYMCO

F17	Rear Cushion

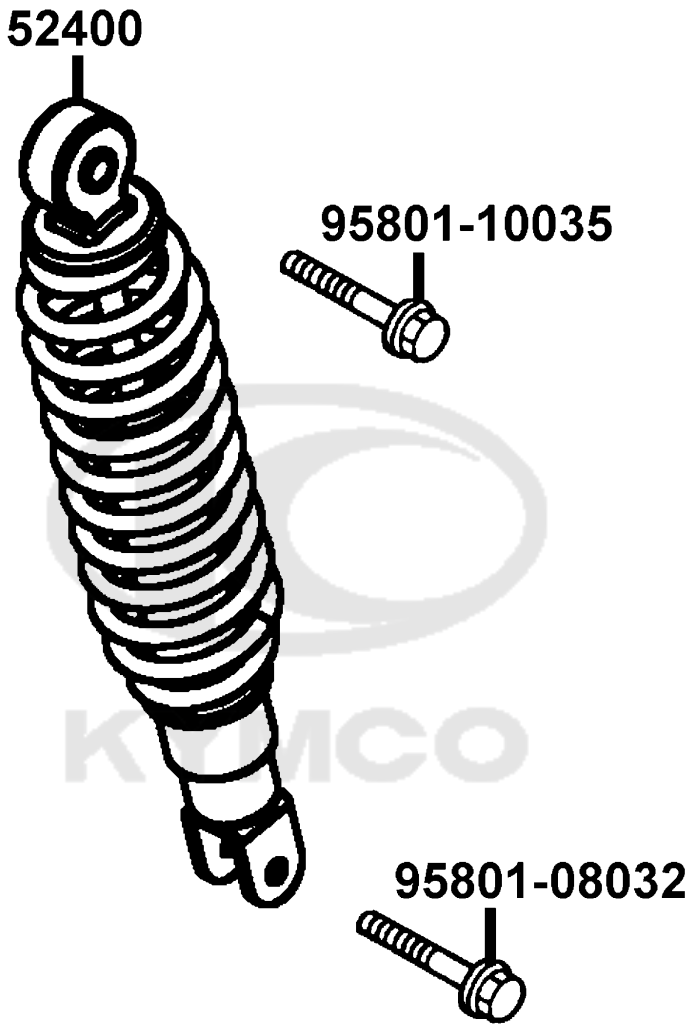

Sales mark	Ref no	Part no	Description	Reg description	Regd no
**	52400	52400-LHM9-E10	CUSHION ASSY REAR	CUSHION ASSY REAR	1
	95801-08032	95801-08032-08	BOLT FLANGE 8*32(C)	BOLT FLANGE 8*32(C)	1
	95801-10035	95801-10035-08	BOLT FLANGE 10*35	BOLT FLANGE 10*35	1

KYMCO

F18	Front Winker

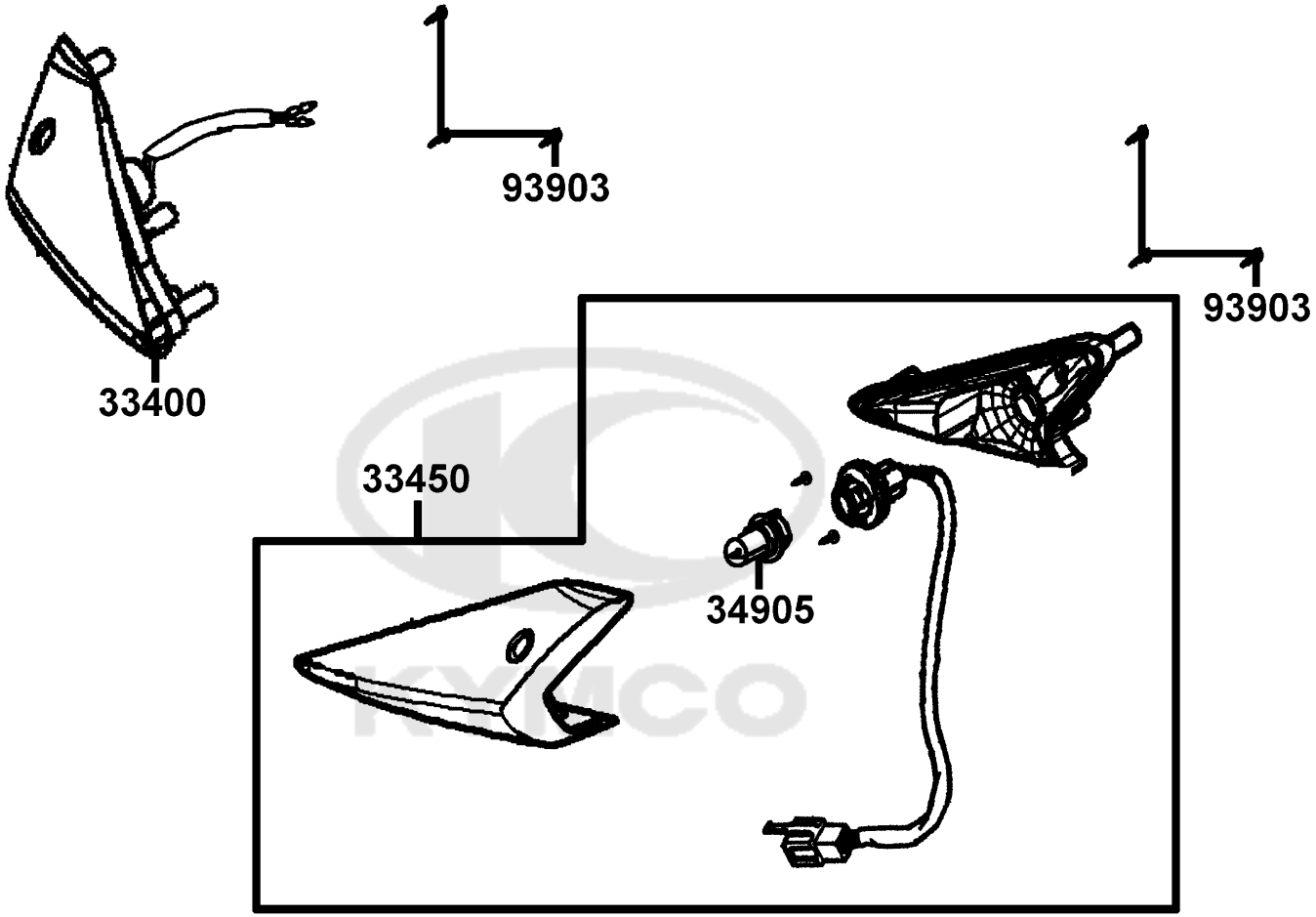

Sales mark	Ref no	Part no	Description	Reg description	Regd no
	33400	33400-LGB5-E10	WINKER ASSY R FR	WINKER ASSY R FR	1
	33450	33450-LGB5-E10	WINKER ASSY L FR	WINKER ASSY L FR	1
	34905	34905-LCA5-E00	BULB WINKER (12V 10W)	BULB WINKER 12V 10W	2
	93903	93903-34380	SCREW TAPPING 4*12	SCREW TAPPING 4*12(K)	6

KYMCO

F19	Tail Light

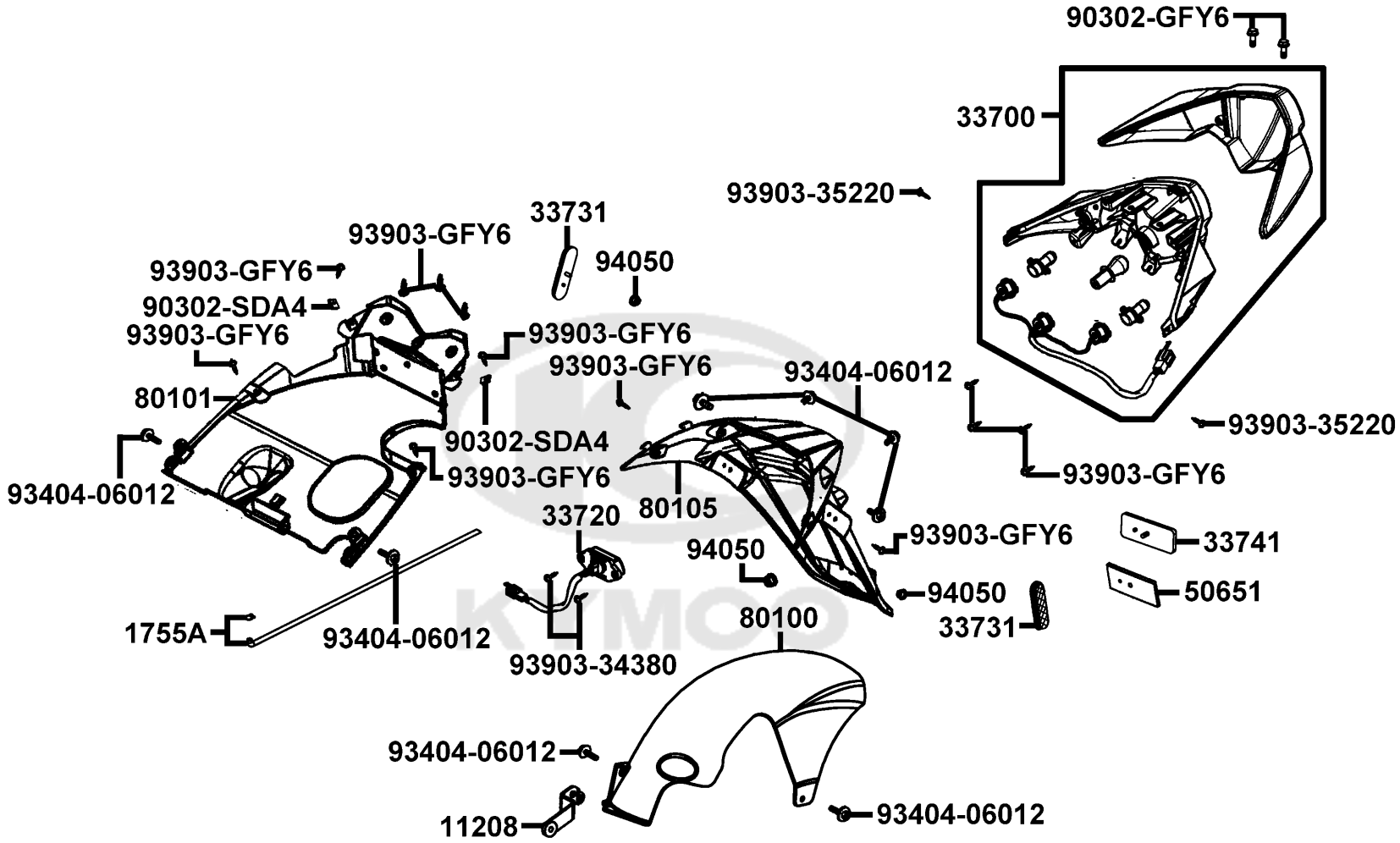

Sales mark	Ref no	Part no	Description	Reg description	Regd no
	11208	11208-LBD6-C00	STAY RR TIRE FENDER	STAY RR TIRE FENDER	1
	1755A	1755A-LDC8-E10	TUBE ASSY FUEL DRAIN	TUBE ASSY FUEL DRAIN	1
	33700	33700-LGB5-E10	LIGHT ASSY RR COMB	LIGHT ASSY RR COMB	1
	33720	33720-LGB5-E10	LIGHT ASSY LICENSE	LIGHT ASSY LICENSE	1
	33731	33731-KGB5-C00	REFLEX REFLECTOR,SIDE	REFLEX REFLECTOR,SIDE	1
	33741	33741-KEBE-C00	REFLEX REFLECTOR	REFLEX REFLECTOR	1
	50651	50651-LFC4-E10	STAY RR FENDER BALANCE	STAY RR FENDER BALANCE	1
**	80100	80100-LHM9-E10	FENDER REAR TIRE	FENDER REAR TIRE	1
**	80101	80101-LGB5-E10	FENDER RR INNER	FENDER RR INNER	1
**	80105	80105-LGB5-E10	FENDER REAR	FENDER REAR	1
	90302-GFY6	90302-GFY6-C00	BOLT WASH 5*12	BOLT WASH 5*12	2
	90302-SDA4	90302-SDA4-C00	NUT SPRING 4MM	NUT SPRING 4MM	2
	93404-06012	93404-06012-07	BOLT WASH 6*12	BOLT WASH 6*12	8
	93903-34380	93903-34380	SCREW TAPPING 4*12	SCREW TAPPING 4*12(K)	2
	93903-35220	93903-35220	SCREW TAPPING 5*12	SCREW TAPPING 5*12	2
	93903-GFY6	93903-GFY6-C01	SCREW TAPPING 4*14(K)	SCREW TAPPING 4*14(K)	13
	94050	94050-05080	NUT FLANGE 5MM	NUT FLANGE 5MM	3

KYMCO

Wire Harness

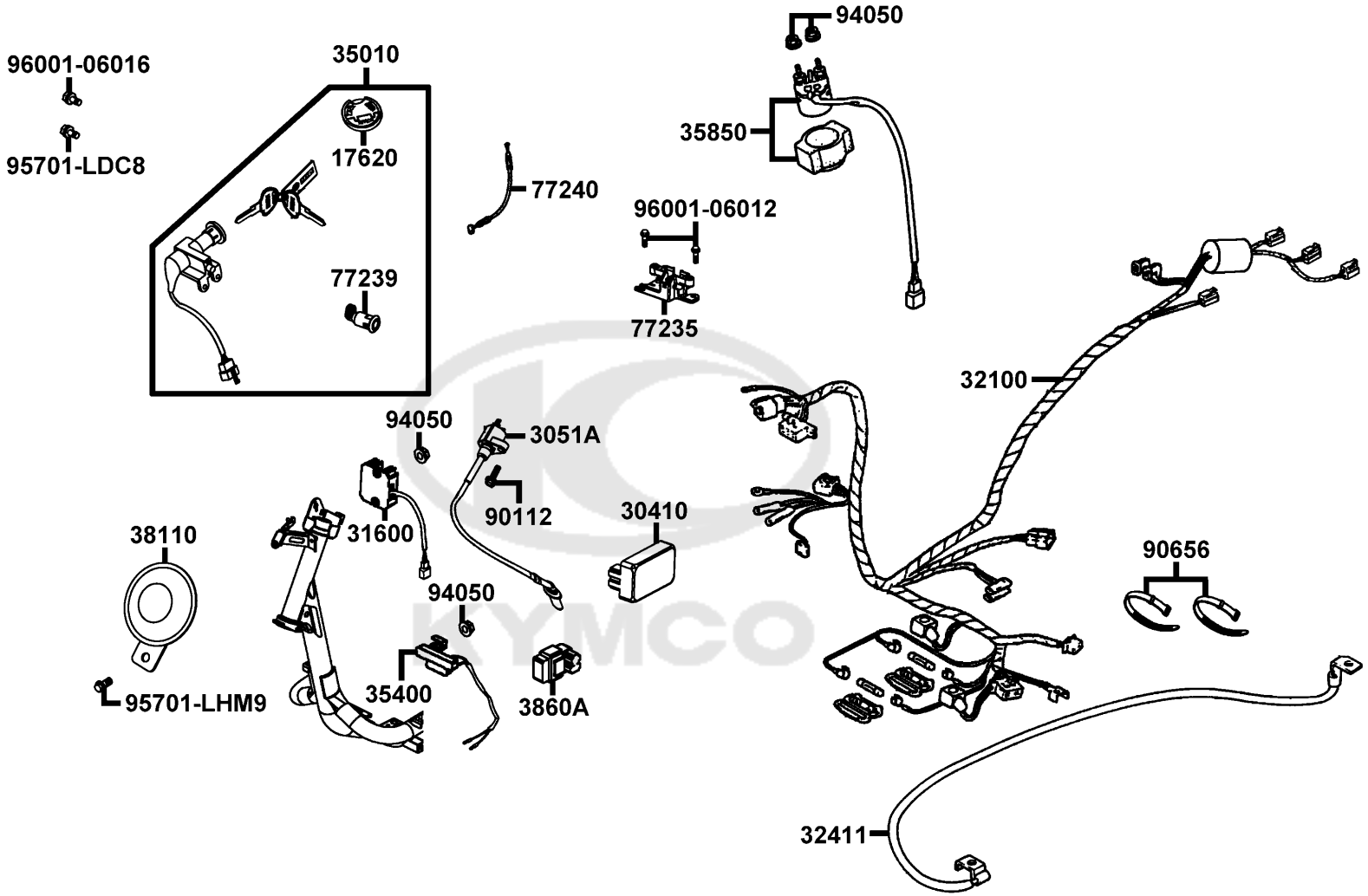

Sales mark	Ref no	Part no	Description	Reg description	Regd no
	17620	17620-LDF7-E10	CAP COMP FUEL FILLER	CAP COMP FUEL FILLER	1
	30410	30410-LHB3-E10	UNIT COMP C.D.I.	UNIT COMP C.D.I.	1
	3051A	3051A-KELE-C00	COIL ASSY IGN	COIL ASSY IGN	1
#	31600	31600-LFC2-E11	REG REC COMP DC	REG. REC. COMP.	1
	32100	32100-LHM9-E10	HARNESS WIRE	HARNESS WIRE	1
	32411	32411-LEJ3-E11	CABLE BAT	CABLE BAT	1
	35010	35010-LGB5-E90	KEY SET ASSY	KEY SET ASSY	1
	35400	35400-LHB3-E10	RESISTOR COMP	RESISTOR COMP	1
	35850	35850-KHD8-C00	RELAY ASSY START	RELAY ASSY START	1
	38110	38110-LHM9-E10	HORN COMP	HORN COMP	1
	3860A	3860A-LGB5-E12	CONTROL ASSY LIGHTING	CONTROL ASSY LIGHTING	1
	77235	77235-LGB5-E10	SEAT CATCH COMP	SEAT CATCH COMP	1
	77239	77239-GFY6-C00	KEY SEAT LOCK	KEY SEAT LOCK	1
	77240	77240-LGB5-E10	CABLE COMP SEAT LOCK	CABLE COMP SEAT LOCK	1
	90112	90112-KRDR-C00	BOLT FLANGE 5*22	BOLT FLANGE 5*22	1
	90656	90656-GFY6-911	BAND HOSE **GFY6-901 C.2005.04.13	BAND HOSE **GFY6-901 C.2005.04.13	2
	94050	94050-06080	NUT FLANGE 6MM	NUT FLANGE 6MM	4
	95701-LDC8	95701-LDC8-E11	BOLT TORQUE 6x16	BOLT TORQUE 6x16	1
	95701-LHM9	95701-LHM9-E60	BOLT FLANGE 8*12 (C)	BOLT FLANGE 8*12 (C)	1
	96001-06012	96001-06012-08G	BOLT FLANGE SH 6x12 (C)	BOLT FLANGE SH 6*12 (Cr3+)	2

KYMCO

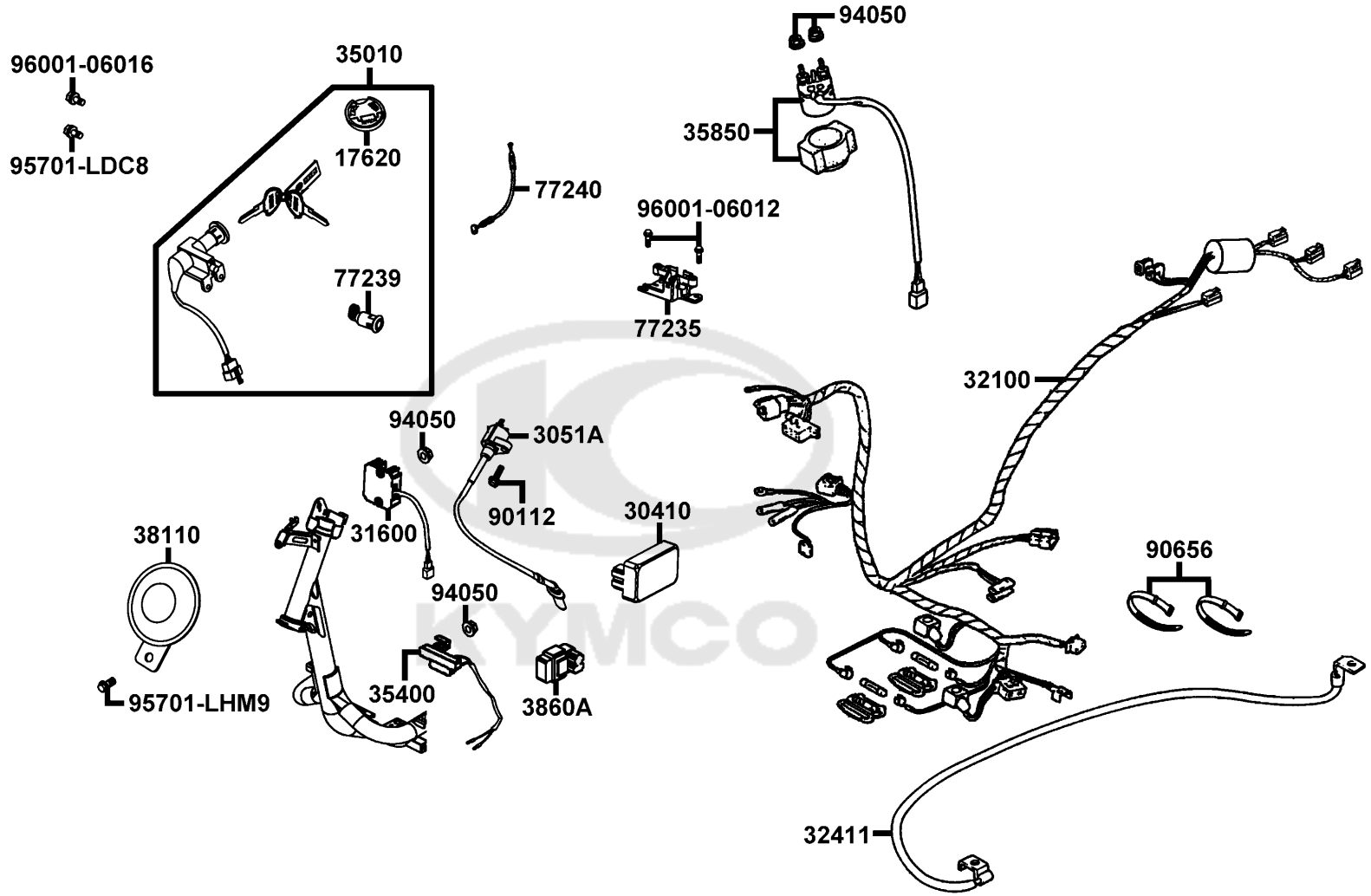
96001-06016
95701-LDC8
35010
17620
77239
77240
94050
35850
96001-06012
77235
32100
94050
3051A
90112
30410
31600
38110
94050
35400
3860A
95701-LHM9
90656
32411

Sales mark	Ref no	Part no	Description	Reg description	Regd no
	96001-06016	96001-06016-08	BOLT FLANGE SH 6*16	BOLT FLANGE SH 6*16	1

KYMCO

F21	Frame Body

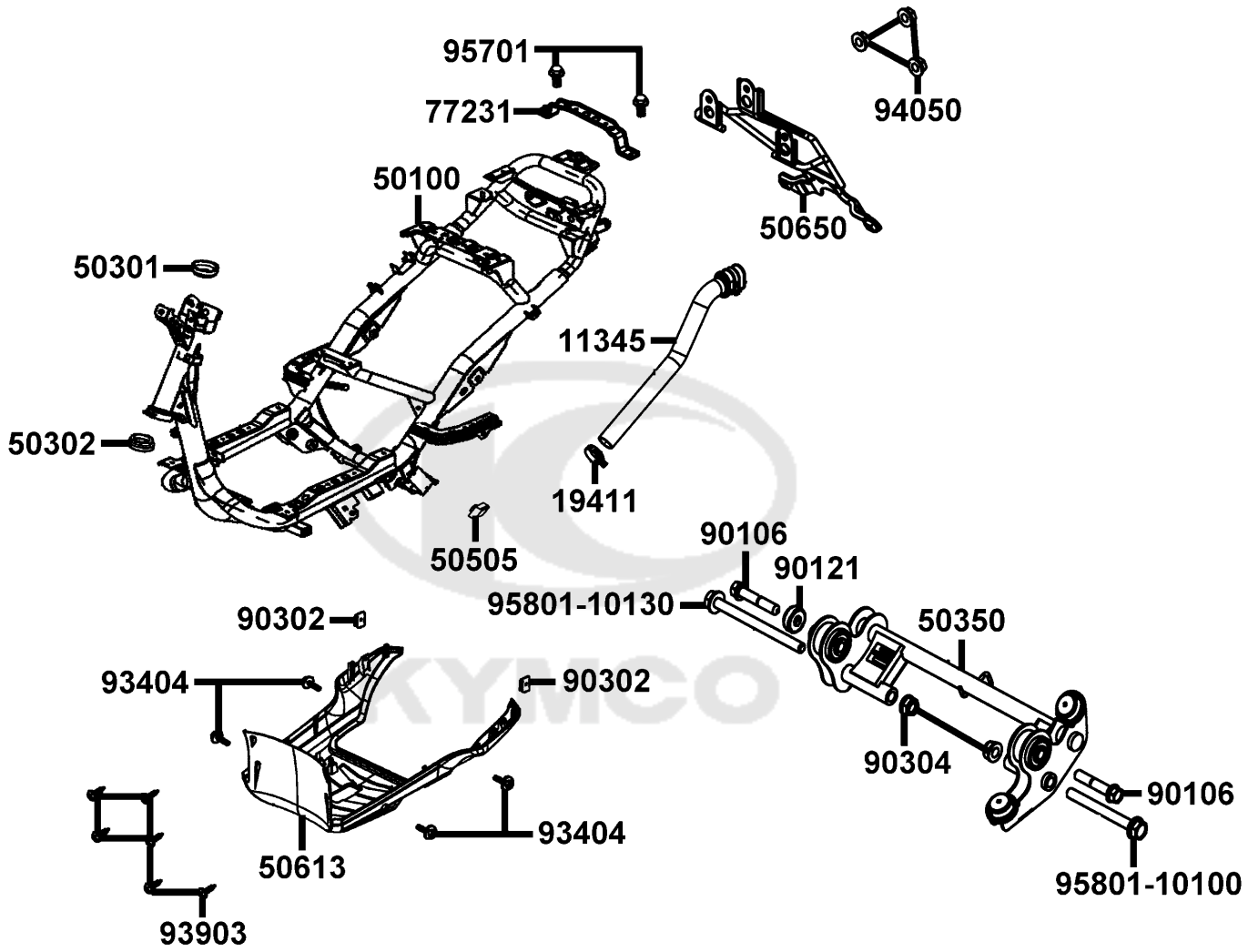

Sales mark	Ref no	Part no	Description	Reg description	Regd no
	11345	11345-LHB3-E10	"DUCT, L COVER"	"DUCT, L COVER"	1
	19411	19411-KNBN-C10	CLIP HOSE	CLIP HOSE	1
	50100	50100-LHM9-E10	BODY COMP FRAME	BODY COMP FRAME	1
	50301	50301-GLM0-C00	RACE UPPER STRG BALL	RACE UPPER STRG BALL	1
	50302	50302-2H68-C00	RACE (STRG BOT) BALL	RACE (STRG BOT) BALL	1
	50350	50350-LGR4-E10	ENG HANGER COMP	ENG HANGER COMP	1
	50505	50505-LDC8-E10	STOPPER RUBBER	STOPPER RUBBER	1
**	50613	50613-LGB5-E10	COVER UNDER	COVER UNDER	1
	50650	50650-LGB5-E10	STAY RR FENDER	STAY RR FENDER	1
	77231	77231-LGB5-E10	STAY BACK SEAT	STAY BACK SEAT	1
	90106	90106-LGB6-E10	"BOLT,FLANGE,10x55"	"BOLT,FLANGE,10x55"	2
	90121	90121-GFY6-C00	COLLAR DISTANCE	COLLAR DISTANCE	1
	90302	90302-SDA4-C00	NUT SPRING 4MM	NUT SPRING 4MM	1
	90304	90304-GHE8-C00	NUT U 10MM (C)	NUT U 10MM (C)	1
	93404	93404-06016-07	BOTL WASHER 6*16	BOTL WASHER 6*16	4
	93903	93903-34380	SCREW TAPPING 4*12	SCREW TAPPING 4*12(K)	6
	94050	94050-06080	NUT FLANGE 6MM	NUT FLANGE 6MM	3
	95701	95701-06012-08	BOLT FLANGE 6*12	BOLT FLANGE 6*12	2
	95801-10100	95801-10100-08	BOLT FLANGE 10*100	BOLT FLANGE 10*100	1
	95801-10130	95801-10130-08	BOLT FLANGE 10*130	BOLT FLANGE 10*130	1

KYMCO

F22	Air Cleaner Two

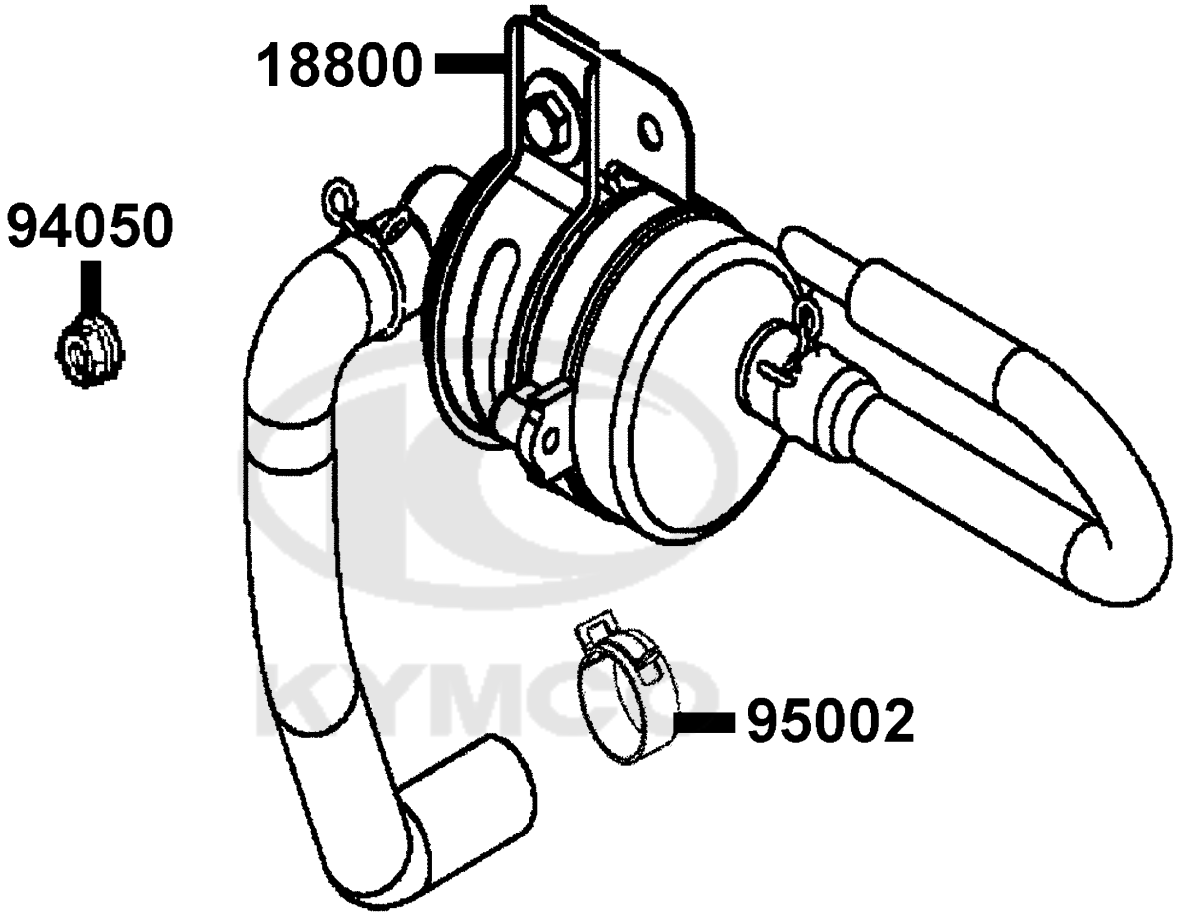

Sales mark	Ref no	Part no	Description	Reg description	Regd no
	18800	18800-LHM9-E10	AI CLEANER ASSY	AI CLEANER ASSY	1
	94050	94050-06080	NUT FLANGE 6MM	NUT FLANGE 6MM	1
	95002	95002-KKD6-C00	CLAMP D18 TUBE	CLAMP D18 TUBE	1

KYMCO

Emblem Stripe

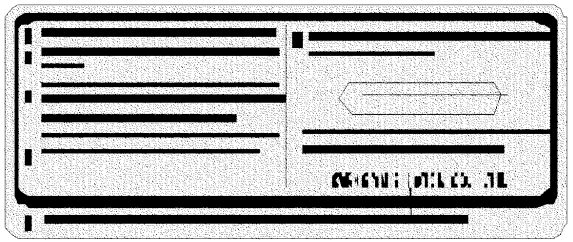

87560

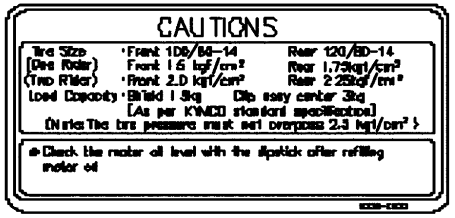

87505

86732 86733

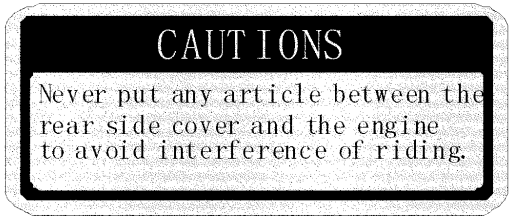

87542

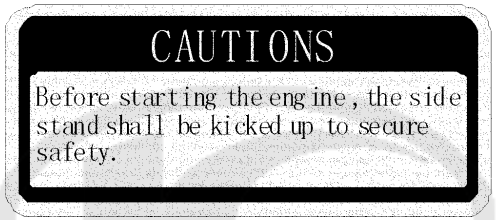

87541

86221 86231

86734 86735

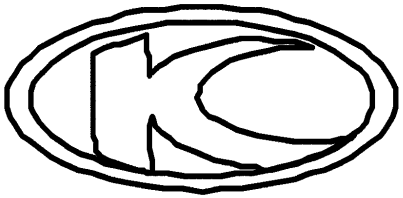

86102

86282 86283

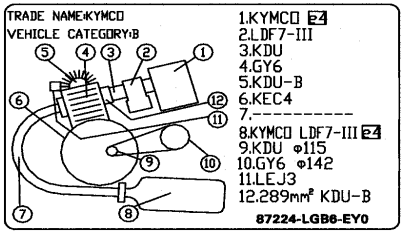

87224

86202

Sales mark	Ref no	Part no	Description	Reg description	Regd no
**	86102	86102-LEA5-E00	EMB K-LOGO 30MM	EMB K-LOGO 30MM	1
**	86202	86202-LGB5-E10	EMB BODY COVER	EMB BODY COVER	1
**	86221	86221-LGB5-E10	STRIPE R BODY COVER	STRIPE R BODY COVER	1
**	86231	86231-LGB5-E10	STRIPE L BODY COVER	STRIPE L BODY COVER	1
**	86282	86282-LGB5-E10	STRIPE R FR MOLD	STRIPE R FR MOLD	1
**	86283	86283-LGB5-E10	STRIPE L FR MOLD	STRIPE L FR MOLD	1
**	86732	86732-LGB5-E10	STRIPE R LEG SHIELD	STRIPE R LEG SHIELD	1
**	86733	86733-LGB5-E10	STRIPE L LEG SHIELD	STRIPE L LEG SHIELD	1
**	86734	86734-LGB5-E10	STRIPE B R LEG SHIELD	STRIPE B R LEG SHIELD	1
**	86735	86735-LGB5-E10	STRIPE B L LEG SHIELD	STRIPE B L LEG SHIELD	1
**	87224	87224-LHM9-EZ0	CAUTION ANTI TAMPERING	CAUTION ANTI TAMPERING	1
**	87505	87505-LDC8-E10	LABEL TIRE	LABEL TIRE	1
**	87541	87541-GAR1-C01	MARK MAINT CAUTION L	MARK MAINT CAUTION L	1
**	87542	87542-GAR1-C01	MARK MAINT CAUTION	MARK MAINT CAUTION	1
**	87560	87560-KNBN-E01	MARK DRIVE CAUTION	MARK DRIVE CAUTION	1

KYMCO

PART NO. INDEX

PART NO.	VERSION	PAGE	PART NO.	VERSION	PAGE	PART NO.	VERSION	PAGE
						12201-KEB7-C00	0	E02
1000			**4000**			12251-KEB7-C00	0	E02
1001-GC8H-0351	0	E11	4000-077-0000	0	E11	**13000**		
1010-GAKH-9200	0	E11						
1014-GAKH-9100	0	E11	**11000**			1300A-GKAK-C00	0	E10
1019-GW3H-9800	0	E11				13011-GLW0-C00	0	E10
1020-GAKH-9300	0	E11	11100-KGB5-900	4	E09	13101-GLW0-901	2	E10
1031-181H-8310	0	E11	11102-1G87-C00	3	E09	13111-1F66-001	2	E10
1034-153H-9901	0	E11	11108-KEB7-C00	0	E03	13115-1F56-C00	0	E10
103J-073H-9900-SB00	0	E11	11200-KEB7-325	0	E09			
105B-KBNH-9000	0	E11	11203-GGC7-W10	2	E09	**14000**		
106B-KG8H-9804	0	E11	11204-LEJ2-E10	0	E09			
1300-GW0H-9000	0	E11	11205-GHAH-C00	1	E09	14100-KEB7-C00	0	E09
1300-GW3H-Q800	0	E11	11205-KED5-C00	0	E09			
1300-KG8H-9010	0	E11	11208-GKAK-C00	0	E09	**15000**		
1300-KG8H-Q010	0	E11	11208-LBD6-C00	1	F19			
1703-GJ2H-0040	0	E11	1120B-KGN7-C00	1	E08	15100-KEB7-E00	0	E09
1782-KG8H-9010	0	E11	11341-KKD6-C00	0	E05	15110-KEB7-C00	0	E09
1785-KBNH-9000-SB00	0	E11	11345-LHB3-E10	0	F21	1551A-LCD1-E00	0	E09
1793-144H-9900	0	E11	11395-KKD6-E90	0	E05			
1795-KG8H-9010	0	E11				**16000**		
1799-KBNH-9000	0	E11	**12000**					
						16075-KG8-9010-M1	0	E11
			12101-KEB7-C00	0	E02	16076-KG8-9010-M1	0	E11
			12191-KEB7-E90	0	E02	16076-ND5-0040	0	E11

PART NO. INDEX

PART NO.	VERSION	PAGE	PART NO.	VERSION	PAGE	PART NO.	VERSION	PAGE
1610K-KFA6-E05	1	E11				22102-LDC8-E10	1	E06
16152-KG8-9010-M1	0	E11	**18000**			22103-KEB7-C00	1	E06
16162-KG8-9010-M1	0	E11				22105-KFA5-C00	0	E06
1621A-GKAK-901	0	E09	18291-LHB3-E11	0	F15	22110-LDC8-E10	2	E06
16620-LGR4-E10	2	E11	18294-PUA3-B50	1	F15	22121-GLW0-315	0	E06
1691A-LHM9-E10	0	F10	1830A-LHM9-E10	0	F15	22131-GHAH-C00	1	E06
16950-KKJ9-752	2	F10	18318-LGR4-E10	0	F15	22132-GLW0-315	0	E06
			1860A-KFB5-C00	0	F15	22300-KXCX-900	2	E07
17000			18657-LEH2-B50	1	F10	22350-GKAK-C00	1	E07
			18800-LHM9-E10	0	F22	22401-GBG2-C00	0	E07
17100-KEB7-901	1	E09				22530-GKAK-C00	1	E07
17111-LHM9-E90	0	E09	**19000**			22804-1H48-C00	1	E07
17112-KEB7-E90	0	E09						
17200-LHM9-E10	5	F14	19411-KNBN-C10	2	F21	**23000**		
17205-LHM9-E10	0	F14	19510-GBW2-C00	1	E03			
17207-KEB7-900	0	F14	19600-KEB7-C00	0	E01	2301A-KEB7-C00	0	E07
1720A-KEB7-E00	0	F14	1962A-KEB7-C10	0	E01	23100-KEB7-C00	1	E07
17500-LCB9-C10	3	F10				23200-GAR1-C00	1	E07
17502-1G87-001	0	F12	**21000**			23220-GKAK-C00	0	E07
1755A-KKD5-C10	1	F10				23225-GAR1-C00	1	E07
1755A-LDC8-E10	1	F19	21200-KFA1-900	2	E08	23233-GHE8-001	2	E07
17620-LDF7-E10	0	F20	21395-KNBN-E90	1	E08	23237-GAR1-C00	1	E07
17910-LHM9-E11	0	F03				23238-GGS7-C00	0	E07
			22000			23411-KEB7-C00	0	E08
						23420-KEB7-C00	0	E08
			22100-LHM9-E10	0	E07	23432-KEB7-C00	0	E08

PART NO. INDEX

PART NO.	VERSION	PAGE	PART NO.	VERSION	PAGE	PART NO.	VERSION	PAGE
2343A-KNBN-C00	1	E08						
			32000			**35000**		
28000								
			32100-LHM9-E10	0	F20	35010-LGB5-E90	0	F20
28211-KEB7-W10	1	E06	32101-GFY6-C00	1	F04	3515A-LGB5-E10	3	F03
2823A-GKAK-W10	1	E06	32105-LHB3-E10	1	E04	3515A-LGB5-EV0	0	F03
28250-LDF7-E10	1	E06	32411-LEJ3-E11	0	F20	3520A-LGB5-E11	0	F03
28253-GBN2-C00	5	E06				35340-KKJ9-C00	0	F03
28255-GFS6-C00	5	E06	**33000**			35340-KNBN-901	1	F04
28281-GBN2-C00	1	E06				35400-LHB3-E10	0	F20
28300-LHB3-E10	3	F16	33100-LGB5-E10	0	F01	35410-LHM9-E10	0	F12
			33108-LGB5-E10	0	F01	35850-KHD8-C00	1	F20
30000			33400-LGB5-E10	3	F18			
			33450-LGB5-E10	1	F18	**37000**		
30410-LHB3-E10	1	F20	33700-LGB5-E10	0	F19			
3051A-KELE-C00	0	F20	33720-LGB5-E10	1	F19	37200-LHM9-E10	0	F02
			33731-KGB5-C00	2	F19	37802-GGA7-C00	1	F10
31000			33741-KEBE-C00	0	F19	3780A-LDC8-E10	0	F10
31100-LHB3-M30	0	E03	**34000**			**38000**		
31110-LHB3-M30	0	E03						
31120-LHB3-M30	0	E03	34901-LDC8-E10	1	F01	38110-LHM9-E10	2	F20
31200-LHM9-E10	0	E04	34903-LDC8-E10	1	F01	38300-KECE-W10	2	F02
31209-GKAK-C00	0	E04	34905-LCA5-E00	0	F18	3860A-LGB5-E12	0	F20
31500-GFY6-E00	1	F11						
31600-LFC2-E11	0	F20						

PART NO. INDEX

PART NO.	VERSION	PAGE
42000		
42601-LGB5-E10	0	F08
42601-LGB5-E10	1	F08
42710-LDC8-E11	3	F08
42753-0A01-C00	1	F07
42753-0A01-C00	1	F08
43000		
4312A-KXCX-C00	8	F08
4314A-KKD6-E00	2	F08
43410-KFA1-C00	8	F08
43450-LHM9-E10	0	F03
44000		
44305-KGE2-E00	9	F07
44306-KGE2-E00	9	F07
44311-GLW0-W10	1	F07
44601-LGB5-E10	0	F07
44601-LGB5-E10	1	F07
44620-KEB7-C00	0	F07
44710-LDC8-E11	2	F07
44800-LDC8-E10	1	F07
44830-LHM9-E60	3	F02
45000		
45105-LDC8-305	1	F04
45121-LGB5-E80	2	F07
45126-LHM9-E60	0	F04
45156-KDLD-C00	2	F06
45156-KNBN-C00	1	F06
45200-LGB5-E10	0	F04
45500-LDC8-E10	3	F04
45517-GFY6-900	5	F03
50000		
50100-LHM9-E10	1	F21
50301-GLM0-C00	1	F21
50302-2H68-C00	2	F21
50306-1F96-C00	1	F06
50326-LGB5-E10	0	F11
50330-KEBE-C00	1	F05
50350-LGR4-E10	1	F21
50503-KEB7-C00	0	F16
50505-LAD9-C00	1	F16
50505-LDC8-E10	2	F21
5050A-LHM9-E10	0	F16
50530-LGB5-E10	1	F16
50531-KEB7-C00	1	F16
50535-KEB7-W10	3	F16
50550-KEB7-C00	1	F16
50613-LGB5-E10	1	F21
50650-LGB5-E10	1	F21
50651-LFC4-E10	1	F19
51000		
51400-LGB5-E10	0	F06
51500-LGB5-E10	0	F06
52000		
52400-LHM9-E10	0	F17
52400-LHM9-E10	2	F17
53000		
53100-LGB5-E10	2	F03
53105-KNBN-C00	2	F03
53125-GEN5-C00	1	F03
53140-KNBN-C00	0	F03
53140-KNBN-C00	1	F03
53166-KNBN-C00	1	F03

PART NO. INDEX

PART NO.	VERSION	PAGE	PART NO.	VERSION	PAGE	PART NO.	VERSION	PAGE
53172-LGB6-E10	0	F03				80105-LGB5-E10	0	F19
53175-LDC8-E10	1	F04	**64000**			80151-LGB5-E10	0	F13
53178-LGB6-E10	1	F03						
5317B-LGB6-E10	3	F03	64301-LGB5-E10	1	F05	**81000**		
53190-GFY6-C00	0	F03	64302-LGB5-E10	3	F05			
53191-GFY6-C00	2	F03	64303-LGB5-E10	0	F05	81132-LCB9-C10	1	F05
53200-LDC8-E91	6	F06	64304-LGB5-E10	1	F05	81132-LDC8-E10	1	F05
53205-LGB5-E10	1	F03	6430A-LGB5-E10	0	F05	81133-KNBN-C00	1	F05
53206-LGB5-E10	1	F03	64310-LGB5-E10	1	F05	81200-LGB5-E10	0	F13
53211-GFY6-C00	1	F06	64316-LCB9-C10	4	F05	81250-LHM9-E10	0	F13
53212-2L50-C00	1	F06	64316-LCB9-C10	5	F05	81252-LGB5-E10	1	F13
53214-2L50-C00	5	F06				81255-LGB5-E10	0	F13
53215-2L50-C00	1	F06	**77000**			81255-LGB5-E10	1	F13
						81256-LGB5-E10	1	F13
55000			77200-LGB5-E10	0	F09			
			77231-LGB5-E10	0	F21	**83000**		
55100-LHM9-E10	0	F12	77232-KCAC-C00	2	F13			
55106-KEB7-C00	0	F12	77235-LGB5-E10	6	F20	83500-LGB5-E10	1	F13
55121-LCD1-C00	0	F12	77239-GFY6-C00	0	F20	83500-LGB5-E10	2	F13
55200-LGR4-E10	0	E09	77240-LGB5-E10	1	F20	83510-LGB5-E10	0	F13
						83510-LGB5-E10	1	F13
61000			**80000**			83600-LGB5-E10	0	F13
						83600-LGB5-E10	4	F13
61100-LGB5-E10	1	F06	80100-LHM9-E10	0	F19	83610-LGB5-E10	0	F13
6111A-LDC8-E90	0	F06	80101-LGB5-E10	0	F19			
			80102-LHM9-E10	1	E09			

PART NO. INDEX

PART NO.	VERSION	PAGE	PART NO.	VERSION	PAGE	PART NO.	VERSION	PAGE
						90121-GFY6-C00	1	F21
86000			**88000**			90121-KBE2-C00	4	F07
						90131-GLW0-C00	1	F04
86102-LEA5-E00	1	F23	88110-LEB5-C11	2	F03	90145-9A61-C00	1	F04
86202-LGB5-E10	0	F23	88120-LEB5-C11	2	F03	90202-1G87-C00	1	E07
86202-LGB5-E10	1	F23				90301-KGBG-C00	1	F15
86221-LGB5-E10	0	F23	**89000**			90302-GFY6-C00	2	F03
86231-LGB5-E10	0	F23				90302-GFY6-C00	2	F19
86231-LGB5-E10	1	F23	89010-KGBG-C00	1	F09	90302-SDA4-C00	2	F03
86282-LGB5-E10	0	F23				90302-SDA4-C00	2	F05
86283-LGB5-E10	0	F23	**90000**			90302-SDA4-C00	2	F13
86732-LGB5-E10	0	F23				90302-SDA4-C00	2	F19
86733-LGB5-E10	0	F23	90001-GKAK-C00	0	E02	90302-SDA4-C00	2	F21
86734-LGB5-E10	0	F23	90105-KCR3-001	3	F07	90304-GHE8-C00	1	F03
86735-LGB5-E10	0	F23	90106-GEN5-901	1	F03	90304-GHE8-C00	1	F21
			90106-LGB6-E10	1	F21	90305-KNBN-C00	1	F08
87000			90108-KEB7-E00	0	F16	90306-KLF0-C00	1	F07
			90110-GLW0-C00	0	F05	90309-KLF0-C00	1	E08
87224-LHM9-EZ0	0	F23	90110-KEB7-C00	1	F06	90412-3K29-C00	5	E06
87505-LDC8-E10	2	F23	90111-1G87-C01	1	F05	90426-KNBN-C01	1	E06
87505-LDC8-E10	3	F23	90111-1G87-C01	1	F13	90429-KNBN-C00	1	E08
87541-GAR1-C01	0	F23	90112-KRDR-C00	1	F20	90442-0D44-C00	1	E07
87541-GAR1-C01	1	F23	90115-GLE0-C00	6	F03	90451-GBN2-C00	10	E06
87542-GAR1-C01	2	F23	90116-GGS7-C00	2	F03	90454-GBB2-C00	1	E07
87560-KNBN-E01	0	F23	90120-GAR1-C00	0	E09	90474-3C33-C00	1	E09
87560-KNBN-E01	3	F23	90120-KEC2-C00	0	F15	90501-KNBN-C00	1	F08

PART NO. INDEX

PART NO.	VERSION	PAGE	PART NO.	VERSION	PAGE	PART NO.	VERSION	PAGE
90545-3L00-C00	2	F04	91302-PKA9-C00	0	E07	93903-35220	4	F01
90656-GFY6-911	1	F20				93903-35220	4	F19
90660-KGBG-C00	1	F10	**92000**			93903-35380	2	F11
90754-GHC8-C00	1	F07				93903-GFY6-C01	1	F03
90912-GHC8-C00	1	F07	92700-06028-1B	0	E02	93903-GFY6-C01	1	F05
						93903-GFY6-C01	1	F13
91000			**93000**			93903-GFY6-C01	1	F19
91001-GLW0-C00	0	E07	93404-06012-07	5	F19	**94000**		
91001-GLW0-C00	0	E09	93404-06016-07	1	F12			
91004-KBN2-C00	1	E08	93404-06016-07	1	F13	94001-12280-0SG	1	E06
91004-KBN2-C00	1	E09	93404-06016-07	1	F21	94001-12280-0SG	1	F03
91004-KNBN-C00	1	E09	93404-06020-07	4	F13	94050-05080	6	F19
91006-KNBN-C00	0	E09	93500-05012-0H	0	E09	94050-06080	2	E11
91009-GLE0-C00	1	E08	93500-LGB5-E10	0	F13	94050-06080	2	F09
91014-LLJ3-C00	1	F06	93700-05018-0H	1	F02	94050-06080	2	F10
91015-LLJ3-C00	1	F06	93892-04008-18	0	E11	94050-06080	2	F20
91102-GLW0-C00	0	E10	93892-04014-18	0	E11	94050-06080	2	F21
91103-GAR1-C00	1	E07	93903-25220	2	F03	94050-06080	2	F22
91201-KNBN-C00	0	E09	93903-34380	6	F02	94050-10080	1	E03
91202-KNBN-92A	0	E09	93903-34380	6	F03	94050-10080	1	E07
91204-KNBN-C00	1	E09	93903-34380	6	F05	94101-06700	1	F15
91211-GHK8-C00	1	E07	93903-34380	6	F13	94101-08700	0	F15
91255-LDC8-E10	5	E08	93903-34380	6	F18	94101-LGB5-E10	0	F13
91258-KAM1-C00	1	F07	93903-34380	6	F19	94102-08800	0	F16
91301-KEA5-742	0	E07	93903-34380	6	F21	94111-08800	0	F15

PART NO. INDEX

PART NO.	VERSION	PAGE	PART NO.	VERSION	PAGE	PART NO.	VERSION	PAGE
94201-20150	0	F16	95801-10130-08	0	F21			
94301-10200	4	E09	95801-LEJ2-E10	0	F15	**99000**		
94511-14000	10	E06						
94520-24000	1	E07	**96000**			99101-116-0700	0	E11
94591-KFBF-C00	1	E01						
			96001-06008-07	1	F15	**K**		
95000			96001-06012-08G	0	E03			
			96001-06012-08G	0	F20	K378-001	0	E11
95002-02080	0	E11	96001-06016-08	6	E03	K785-KEB-0300	0	E11
95002-KKD6-C00	1	F22	96001-06016-08	6	F20			
95701-06012-08	3	F06	96001-06022-08	2	E03	**N**		
95701-06012-08	3	F21	96001-06025-06	1	F03			
95701-06022-07	3	F16	96001-06025-08	4	E04	N350-09E00	0	E11
95701-06025-08	2	E01	96001-06025-08	4	E05	N413-32A00	0	E11
95701-06032-08	1	F08	96001-06025-08	4	E09	N425-2RFMJ	0	E11
95701-06040-08	0	F14	96001-06032-08	1	E09			
95701-08012-08G	1	E09	96001-06045-08	1	E09			
95701-08040-08	3	E09	96001-06055-08	0	E09			
95701-LDC8-E11	0	F20	96100-62033-00	1	E09			
95701-LHM9-E60	1	F20						
95801-08032-08	1	F17	**98000**					
95801-08035-08	0	E09						
95801-08040-08	4	F06	98076-5871G-00	0	E02			
95801-08050-07	0	F15	98200-10700	2	F11			
95801-10035-08	1	F17	98200-11000	1	F11			
95801-10100-08	0	F21						